BURLINGTON
NORTHERN

DIESEL LOCOMOTIVE DIAGRAMS

— INDEX —

B.N. ENG. NUMBER	PREVIOUS NUMBER	SERIAL NUMBER	BLDR.	MODEL	AAR DESIG'N.	YEAR	PAGE
4010	SPS 100	6009-1	ALCO	415	B-B	1968	106
4011	SPS 101	6009-2	ALCO	415	B-B	1968	106

— INDEX —

B.N. ENG. NUMBER	PREVIOUS NUMBER	SERIAL NUMBER	BLDR.	MODEL	AAR DESIG'N.	YEAR	PAGE

B.N. ENG. NUMBER	PREVIOUS NUMBER	SERIAL NUMBER	BLDR.	MODEL	AAR DESIG'N.	YEAR	PAGE
4054	SPS 69	79247	ALCO	RS-3	B-B	1951	26

— INDEX —

B.N. ENG. NUMBER	PREVIOUS NUMBER	SERIAL NUMBER	BLDR.	MODEL	AAR DESIG'N.	YEAR	PAGE
4056	SPS 71	79594	ALCO	RS-3	B-B	1951	26
4058	SPS 73	79596	ALCO	RS-3	B-B	1951	26
4061	SPS 76	79599	ALCO	RS-3	B-B	1951	26
4064	SPS 79	80495	ALCO	RS-3	B-B	1953	26
4065	SPS 80	80496	ALCO	RS-3	B-B	1953	26
4068	SPS 83	80500	ALCO	RS-3	B-B	1953	26
4070	SPS 90	81368	ALCO	RS-3	B-B	1955	26

B.N. ENG. NUMBER	PREVIOUS NUMBER	SERIAL NUMBER	BLDR.	MODEL	AAR DESIG'N.	YEAR	PAGE
4072	SPS 92	81368	ALCO	RS-3	B-B	1955	26
4077	SPS 97	81701	ALCO	RS-3	B-B	1955	26
4078	SPS 98	81702	ALCO	RS-3	B-B	1955	26
4081	NP 857	81154	ALCO	RS-3	B-B	1955	26
4082	NP 858	81155	ALCO	RS-3	B-B	1955	26
4085	NP 861	81158	ALCO	RS-3	B-B	1953	26

– INDEX –

B.N. ENG. NUMBER	PREVIOUS NUMBER	SERIAL NUMBER	BLDR.	MODEL	AAR DESIG'N.	YEAR	PAGE

B.N. ENG. NUMBER	PREVIOUS NUMBER	SERIAL NUMBER	BLDR.	MODEL	AAR DESIG'N.	YEAR	PAGE
4180	NP 900	82830	ALCO	RS-11	B-B	1958	28
4181	NP 901	82831	ALCO	RS-11	B-B	1958	28
4182	NP 902	82881	ALCO	RS-11	B-B	1958	28
4183	NP 903	82882	ALCO	RS-11	B-B	1958	28
4184	NP 904	82948	ALCO	RS-11	B-B	1958	28
4185	NP 905	82949	ALCO	RS-11	B-B	1958	28
4186	NP 906	82950	ALCO	RS-11	B-B	1958	28
4187	NP 907	82951	ALCO	RS-11	B-B	1958	28
4188	NP 908	82952	ALCO	RS-11	B-B	1958	28
4189	NP 909	82953	ALCO	RS-11	B-B	1958	28
4190	NP 910	82954	ALCO	RS-11	B-B	1958	28

— INDEX —

B.N. ENG. NUMBER	PREVIOUS NUMBER	SERIAL NUMBER	BLDR.	MODEL	AAR DESIG'N.	YEAR	PAGE
4191	NP 911	82955	ALCO	RS-11	B-B	1958	28
4192	NP 912	83582	ALCO	RS-11	B-B	1960	28
4193	NP 913	83583	ALCO	RS-11	B-B	1960	28
4194	NP 914	83584	ALCO	RS-11	B-B	1960	28
4195	NP 915	83585	ALCO	RS-11	B-B	1960	28
4196	NP 916	83586	ALCO	RS-11	B-B	1960	28
4197	NP 917	83587	ALCO	RS-11	B-B	1960	28

B.N. ENG. NUMBER	PREVIOUS NUMBER	SERIAL NUMBER	BLDR.	MODEL	AAR DESIG'N.	YEAR	PAGE

– INDEX –

B.N. ENG. NUMBER	PREVIOUS NUMBER	SERIAL NUMBER	BLDR.	MODEL	AAR DESIG'N.	YEAR	PAGE
4240	SPS 300	3381-01	ALCO	424	B-B	1964	108
4241	SPS 301	3381-02	ALCO	424	B-B	1964	108

B.N. ENG. NUMBER	PREVIOUS NUMBER	SERIAL NUMBER	BLDR.	MODEL	AAR DESIG'N.	YEAR	PAGE
4243	SPS 303	3381-04	ALCO	424	B-B	1964	108
4244	SPS 304	3381-05	ALCO	424	B-B	1964	108
4246	SPS 306	3381-07	ALCO	424	B-B	1964	108
4252	SPS 312	3423-03	ALCO	425	B-B	1965	110
4253	SPS 313	3423-04	ALCO	425	B-B	1965	110
4254	SPS 314	3423-05	ALCO	425	B-B	1965	110
4255	SPS 315	3423-06	ALCO	425	B-B	1965	110
4256	SPS 316	3423-07	ALCO	425	B-B	1965	110
4257	SPS 317	3423-08	ALCO	425	B-B	1965	110
4258	SPS 320	3461-1	ALCO	425	B-B	1966	110

— INDEX —

B.N. ENG. NUMBER	PREVIOUS NUMBER	SERIAL NUMBER	BLDR.	MODEL	AAR DESIG'N.	YEAR	PAGE
4259	SPS 321	3461-2	ALCO	425	B-B	1966	110
4260	SPS 322	3461-3	ALCO	425	B-B	1966	110
4262	SPS 324	3461-5	ALCO	425	B-B	1966	110
4263	SPS 325	3461-6	ALCO	425	B-B	1966	110
4264	SPS 326	3461-7	ALCO	425	B-B	1966	110

B.N. ENG. NUMBER	PREVIOUS NUMBER	SERIAL NUMBER	BLDR.	MODEL	AAR DESIG'N.	YEAR	PAGE

— INDEX —

B.N. ENG. NUMBER	PREVIOUS NUMBER	SERIAL NUMBER	BLDR.	MODEL	AAR DESIG'N.	YEAR	PAGE

B.N. ENG. NUMBER	PREVIOUS NUMBER	SERIAL NUMBER	BLDR.	MODEL	AAR DESIG'N.	YEAR	PAGE
4360	SPS 330	3488-01	ALCO	636	C-C	1967	112

– INDEX –

B.N. ENG. NUMBER	PREVIOUS NUMBER	SERIAL NUMBER	BLDR.	MODEL	AAR DESIG'N.	YEAR	PAGE
4361	SPS 331	3488-02	ALCO	636	C-C	1967	112
4362	SPS 332	3488-03	ALCO	636	C-C	1967	112
4363	SPS 333	3488-04	ALCO	636	C-C	1967	112
4364	SPS 334	3488-05	ALCO	636	C-C	1967	112
4365	SPS 335	3488-06	ALCO	636	C-C	1967	112
4366	SPS 340	S6010-1	ALCO	636	C-C	1968	112
4367	SPS 341	S6010-2	ALCO	636	C-C	1968	112
4368	SPS 342	S6010-3	ALCO	636	C-C	1968	112
4369	SPS 343	S6010-4	ALCO	636	C-C	1968	112

B.N. ENG. NUMBER	PREVIOUS NUMBER	SERIAL NUMBER	BLDR.	MODEL	AAR DESIG'N.	YEAR	PAGE

— INDEX —

B.N. ENG. NUMBER	PREVIOUS NUMBER	SERIAL NUMBER	BLDR.	MODEL	AAR DESIG'N.	YEAR	PAGE
5200	Q 460	36988	GE	U23C	C-C	1969	90
5201	Q 461	36989	GE	U23C	C-C	1969	90
5202	Q 462	36990	GE	U23C	C-C	1969	90
5203	Q 463	36991	GE	U23C	C-C	1969	90
5204	Q 464	36992	GE	U23C	C-C	1969	90
5205	Q 465	36993	GE	U23C	C-C	1969	90
5206	Q 466	36994	GE	U23C	C-C	1969	90
5207	Q 467	36995	GE	U23C	C-C	1969	90
5208	Q 468	36996	GE	U23C	C-C	1969	90

— INDEX —

B.N. ENG. NUMBER	PREVIOUS NUMBER	SERIAL NUMBER	BLDR.	MODEL	AAR DESIG'N.	YEAR	PAGE

B.N. ENG. NUMBER	PREVIOUS NUMBER	SERIAL NUMBER	BLDR.	MODEL	AAR DESIG'N.	YEAR	PAGE
5300	–	40390	GE	U30C	C-C	1975	102
5301	–	40391	GE	U30C	C-C	1975	102
5302	–	40392	GE	U30C	C-C	1975	102
5303	–	40393	GE	U30C	C-C	1975	102
5304	–	40394	GE	U30C	C-C	1975	102
5305	–	40395	GE	U30C	C-C	1975	102
5306	–	38247	GE	U30C	C-C	1972	102
5307	–	38248	GE	U30C	C-C	1972	102
5308	–	38249	GE	U30C	C-C	1972	102
5309	–	38250	GE	U30C	C-C	1972	102
5310	–	38251	GE	U30C	C-C	1972	102
5311	–	38252	GE	U30C	C-C	1972	102
5312	–	38253	GE	U30C	C-C	1972	102

– INDEX –

B.N. ENG. NUMBER	PREVIOUS NUMBER	SERIAL NUMBER	BLDR.	MODEL	AAR DESIG'N.	YEAR	PAGE
5313	–	38254	GE	U30C	C-C	1972	102
5314	–	38264	GE	U30C	C-C	1972	102
5315	–	38256	GE	U30C	C-C	1972	102
5316	–	38257	GE	U30C	C-C	1972	102
5317	–	38258	GE	U30C	C-C	1972	102
5318	–	38259	GE	U30C	C-C	1972	102
5319	–	38260	GE	U30C	C-C	1972	102
5320	–	38261	GE	U30C	C-C	1972	102
5321	–	38262	GE	U30C	C-C	1972	102
5322	–	38352	GE	U30C	C-C	1972	102
5323	–	38353	GE	U30C	C-C	1972	102
5324	–	38354	GE	U30C	C-C	1972	102
5326	–	38356	GE	U30C	C-C	1972	102
5327	–	38357	GE	U30C	C-C	1972	102
5328	–	38358	GE	U30C	C-C	1972	102
5329	–	38359	GE	U30C	C-C	1972	102

B.N. ENG. NUMBER	PREVIOUS NUMBER	SERIAL NUMBER	BLDR.	MODEL	AAR DESIG'N.	YEAR	PAGE
5330	–	38360	GE	U30C	C-C	1972	102
5331	–	38361	GE	U30C	C-C	1972	102
5332	–	38362	GE	U30C	C-C	1972	102
5333	–	38363	GE	U30C	C-C	1972	102
5334	–	38364	GE	U30C	C-C	1972	102
5335	–	38556	GE	U30C	C-C	1972	102
5336	–	38557	GE	U30C	C-C	1972	102
5337	–	38558	GE	U30C	C-C	1972	102
5338	–	38559	GE	U30C	C-C	1972	102
5339	–	38560	GE	U30C	C-C	1972	102
5340	–	38561	GE	U30C	C-C	1972	102
5341	–	38562	GE	U30C	C-C	1972	102
5342	–	38563	GE	U30C	C-C	1972	102
5343	–	38564	GE	U30C	C-C	1972	102
5344	–	38565	GE	U30C	C-C	1972	102
5345	–	38566	GE	U30C	C-C	1972	102
5346	–	38567	GE	U30C	C-C	1972	102

— INDEX —

B.N. ENG. NUMBER	PREVIOUS NUMBER	SERIAL NUMBER	BLDR.	MODEL	AAR DESIG'N.	YEAR	PAGE
5347	–	38568	GE	U30C	C-C	1972	102
5348	–	38569	GE	U30C	C-C	1972	102
5349	–	38570	GE	U30C	C-C	1972	102
5350	–	38571	GE	U30C	C-C	1972	102
5351	–	38572	GE	U30C	C-C	1972	102
5352	–	38573	GE	U30C	C-C	1972	102
5353	–	40378	GE	U30C	C-C	1975	102
5354	–	40379	GE	U30C	C-C	1975	102
5355	–	40380	GE	U30C	C-C	1975	102
5356	–	40381	GE	U30C	C-C	1975	102
5357	–	40382	GE	U30C	C-C	1975	102
5358	–	40383	GE	U30C	C-C	1975	102
5359	–	40384	GE	U30C	C-C	1975	102
5360	–	40385	GE	U30C	C-C	1975	102
5361	–	40386	GE	U30C	C-C	1975	102
5362	–	40387	GE	U30C	C-C	1975	102
5363	–	40388	GE	U30C	C-C	1975	102
5364	–	40389	GE	U30C	C-C	1975	102
5365	–	39924	GE	U30C	C-C	1974	102
5366	–	39925	GE	U30C	C-C	1974	102
5367	–	39926	GE	U30C	C-C	1974	102
5368	–	39927	GE	U30C	C-C	1974	102
5369	–	39928	GE	U30C	C-C	1974	102
5370	–	39929	GE	U30C	C-C	1974	102
5371	–	39930	GE	U30C	C-C	1974	102
5372	–	39931	GE	U30C	C-C	1974	102
5373	–	39932	GE	U30C	C-C	1974	102
5374	–	39933	GE	U30C	C-C	1974	102
5375	–	39934	GE	U30C	C-C	1974	102
5376	–	39935	GE	U30C	C-C	1974	102
5377	–	39936	GE	U30C	C-C	1974	102
5378	–	39937	GE	U30C	C-C	1974	102
5379	–	39938	GE	U30C	C-C	1974	102
5380	–	39939	GE	U30C	C-C	1974	102

— INDEX —

B.N. ENG. NUMBER	PREVIOUS NUMBER	SERIAL NUMBER	BLDR.	MODEL	AAR DESIG'N.	YEAR	PAGE
5381	–	39940	GE	U30C	C-C	1974	102
5382	–	39941	GE	U30C	C-C	1974	102
5383	–	39942	GE	U30C	C-C	1974	102
5384	–	39943	GE	U30C	C-C	1974	102
5385	–	39944	GE	U30C	C-C	1974	102
5386	–	39945	GE	U30C	C-C	1974	102
5387	–	39946	GE	U30C	C-C	1974	102
5388	–	39947	GE	U30C	C-C	1974	102
5389	–	39948	GE	U30C	C-C	1974	102
5390	–	39949	GE	U30C	C-C	1974	102
5391	–	39950	GE	U30C	C-C	1974	102
5392	–	39951	GE	U30C	C-C	1974	102
5393	–	39952	GE	U30C	C-C	1974	102
5394	–	39953	GE	U30C	C-C	1974	102

B.N. ENG. NUMBER	PREVIOUS NUMBER	SERIAL NUMBER	BLDR.	MODEL	AAR DESIG'N.	YEAR	PAGE
5400	GN 2500	34962	GE	U25B	8-B	1964	92
5401	GN 2501	34963	GE	U25B	B-B	1964	92
5402	GN 2502	34964	GE	U25B	B-B	1964	92
5403	GN 2503	34965	GE	U25B	B-B	1964	92
5404	GN 2504	34966	GE	U25B	B-B	1964	92
5405	GN 2505	34967	GE	U25B	B-B	1964	92
5406	GN 2506	34968	GE	U25B	B-B	1964	92
5407	GN 2507	34984	GE	U25B	B-B	1964	92
5408	GN 2508	34985	GE	U25B	B-B	1964	92
5409	GN 2509	35566	GE	U25B	B-B	1965	92
5410	GN 2510	35567	GE	U25B	B-B	1965	92
5411	GN 2511	35568	GE	U25B	B-B	1965	92
5412	GN 2512	35569	GE	U25B	B-8	1965	92
5413	GN 2513	35570	GE	U25B	B-B	1965	92
5414	GN 2514	35571	GE	U25B	B-B	1965	92

— INDEX —

B.N. ENG. NUMBER	PREVIOUS NUMBER	SERIAL NUMBER	BLDR.	MODEL	AAR DESIG'N.	YEAR	PAGE
5415	GN 2515	35572	GE	U25B	B-B	1965	92
5416	GN 2516	35573	GE	U25B	B-B	1965	92
5417	GN 2517	35574	GE	U25B	B-B	1965	92
5418	GN 2518	35575	GE	U25B	B-B	1965	92
5419	GN 2519	35576	GE	U25B	B-B	1965	92
5420	GN 2520	35577	GE	U25B	B-B	1965	92
5421	GN 2521	35578	GE	U25B	B-B	1965	92
5422	GN 2522	35579	GE	U25B	B-B	1965	92
5423	GN 2523	35580	GE	U25B	B-B	1965	92
5424	Q 100	35194	GE	U25B	B-B	1964	92
5425	Q 101	35195	GE	U25B	B-B	1964	92
5426	Q 102	35196	GE	U25B	B-B	1964	92
5427	Q 103	35197	GE	U25B	B-B	1964	92
5428	Q 104	35198	GE	U25B	B-B	1964	92
5429	Q 105	35199	GE	U25B	B-B	1964	92

B.N. ENG. NUMBER	PREVIOUS NUMBER	SERIAL NUMBER	BLDR.	MODEL	AAR DESIG'N.	YEAR	PAGE

— INDEX —

B.N. ENG. NUMBER	PREVIOUS NUMBER	SERIAL NUMBER	BLDR.	MODEL	AAR DESIG'N.	YEAR	PAGE
5450	Q 106	36101	GE	U28B	B-B	1966	96
5451	Q 107	36102	GE	U28B	B-B	1966	96
5452	Q 108	36103	GE	U28B	B-B	1966	96
5453	Q 109	36104	GE	U28B	B-B	1966	96
5454	Q 110	36105	GE	U28B	B-B	1966	96
5455	Q 111	36116	GE	U28B	B-B	1966	96
5456	Q 112	36117	GE	U28B	B-B	1966	96
5457	Q 113	36118	GE	U28B	B-B	1967	96
5458	Q 114	36119	GE	U28B	B-B	1967	96
5459	Q 115	36120	GE	U28B	B-B	1967	96
5460	GN 2524	35987	GE	U28B	B-B	1966	96
5461	GN 2525	35988	GE	U28B	B-B	1966	96
5462	GN 2526	35989	GE	U28B	B-B	1966	96
5463	GN 2527	35990	GE	U28B	B-B	1966	96
5464	GN 2528	35991	GE	U28B	B-B	1966	96
5465	GN 2529	35992	GE	U28B	B-B	1966	96

B.N. ENG. NUMBER	PREVIOUS NUMBER	SERIAL NUMBER	BLDR.	MODEL	AAR DESIG'N.	YEAR	PAGE
5470	Q 140	36106	GE	U30B	B-B	1966	100
5471	Q 141	36107	GE	U30B	B-B	1966	100
5472	Q 142	36108	GE	U30B	B-B	1966	100
5473	Q 143	36109	GE	U30B	B-B	1966	100
5474	Q 144	36110	GE	U30B	B-B	1966	100
5475	Q 145	36111	GE	U30B	B-B	1966	100
5476	Q 146	36112	GE	U30B	B-B	1966	100
5477	Q 147	36113	GE	U30B	B-B	1966	100
5478	Q 148	36114	GE	U30B	B-B	1966	100
5479	Q 149	36115	GE	U30B	B-B	1966	100
5480	Q 150	36520	GE	U30B	B-B	1968	100
5481	Q 151	36521	GE	U30B	B-B	1968	100
5482	Q 152	36522	GE	U30B	B-B	1968	100

— INDEX —

B.N. ENG. NUMBER	PREVIOUS NUMBER	SERIAL NUMBER	BLDR.	MODEL	AAR DESIG'N.	YEAR	PAGE
5483	Q 153	36523	GE	U30B	B-B	1968	100
5484	Q 154	36524	GE	U30B	B-B	1968	100

B.N. ENG. NUMBER	PREVIOUS NUMBER	SERIAL NUMBER	BLDR.	MODEL	AAR DESIG'N.	YEAR	PAGE
5500	–	41400	GE	C 30-7	C-C	1976	102B
5501	–	41401	GE	C 30-7	C-C	1976	102B
5502	–	41402	GE	C 30-7	C-C	1976	102B
5503	–	41403	GE	C 30-7	C-C	1976	102B
5504	–	41404	GE	C 30-7	C-C	1976	102B
5505	–	41405	GE	C 30-7	C-C	1976	102B
5506	–	41406	GE	C 30-7	C-C	1976	102B
5507	–	41407	GE	C 30-7	C-C	1976	102B
5508	–	41408	GE	C 30-7	C-C	1976	102B
5509	–	41409	GE	C 30-7	C-C	1976	102B
5510	–		GE	C 30-7	C-C	1977	
5511	–		GE	C 30-7	C-C	1977	
5512	–		GE	C 30-7	C-C	1977	
5513	–		GE	C 30-7	C-C	1977	
5514	–		GE	C 30-7	C-C	1977	
5515	–		GE	C 30-7	C-C	1977	
5516	–		GE	C 30-7	C-C	1977	

— INDEX —

B.N. ENG. NUMBER	PREVIOUS NUMBER	SERIAL NUMBER	BLDR.	MODEL	AAR DESIG'N.	YEAR	PAGE
5517	–		GE	C30-7	C-C	1977	
5518	–		GE	C30-7	C-C	1977	
5519	–		GE	C30-7	C-C	1977	
5520	–		GE	C30-7	C-C	1977	
5521	–		GE	C30-7	C-C	1977	
5522	–		GE	C30-7	C-C	1977	
5523	–		GE	C30-7	C-C	1977	
5524	–		GE	C30-7	C-C	1977	
5525	–		GE	C30-7	C-C	1977	
5526	–		GE	C30-7	C-C	1977	
5527	–		GE	C30-7	C-C	1977	
5528	–		GE	C30-7	C-C	1977	
5529	–		GE	C30-7	C-C	1977	
5530	–		GE	C30-7	C-C	1977	
5531	–		GE	C30-7	C-C	1977	
5532	–		GE	C30-7	C-C	1977	
5533	–		GE	C30-7	C-C	1977	

B.N. ENG. NUMBER	PREVIOUS NUMBER	SERIAL NUMBER	BLDR.	MODEL	AAR DESIG'N.	YEAR	PAGE
5534	–		GE	C30-7	C-C	1977	
5535	–		GE	C30-7	C-C	1977	
5536	–		GE	C30-7	C-C	1977	
5537	–		GE	C30-7	C-C	1977	
5538	–		GE	C30-7	C-C	1977	
5539	–		GE	C30-7	C-C	1977	
5540	–		GE	C30-7	C-C	1977	
5541	–		GE	C30-7	C-C	1977	
5542	–		GE	C30-7	C-C	1977	
5543	–		GE	C30-7	C-C	1977	
5544	–		GE	C30-7	C-C	1977	

– INDEX –

B.N. ENG. NUMBER	PREVIOUS NUMBER	SERIAL NUMBER	BLDR.	MODEL	AAR DESIG'N.	YEAR	PAGE

B.N. ENG. NUMBER	PREVIOUS NUMBER	SERIAL NUMBER	BLDR.	MODEL	AAR DESIG'N.	YEAR	PAGE
5600	NP 2500	35035	GE	U25C	C-C	1964	94
5601	NP 2501	35036	GE	U25C	C-C	1964	94
5602	NP 2502	35037	GE	U25C	C-C	1964	94
5603	NP 2503	35038	GE	U25C	C-C	1964	94
5604	NP 2504	35039	GE	U25C	C-C	1964	94
5605	NP 2505	35040	GE	U25C	C-C	1964	94
5606	NP 2506	35041	GE	U25C	C-C	1964	94
5607	NP 2507	35042	GE	U25C	C-C	1964	94
5608	NP 2508	35043	GE	U25C	C-C	1964	94
5609	NP 2509	35044	GE	U25C	C-C	1964	94
5610	NP 2510	35045	GE	U25C	C-C	1964	94
5611	NP 2511	35046	GE	U25C	C-C	1964	94
5612	NP 2512	35047	GE	U25C	C-C	1964	94
5613	NP 2513	35048	GE	U25C	C-C	1964	94
5614	NP 2514	35049	GE	U25C	C-C	1964	94
5615	NP 2515	35582	GE	U25C	C-C	1965	94
5616	NP 2516	35583	GE	U25C	C-C	1965	94

— INDEX —

B.N. ENG. NUMBER	PREVIOUS NUMBER	SERIAL NUMBER	BLDR.	MODEL	AAR DESIG'N.	YEAR	PAGE
5617	NP 2517	35584	GE	U25C	C-C	1965	94
5618	NP 2518	35585	GE	U25C	C-C	1965	94
5619	NP 2519	35586	GE	U25C	C-C	1965	94
5620	NP 2520	35587	GE	U25C	C-C	1965	94
5621	NP 2521	35588	GE	U25C	C-C	1965	94
5622	NP 2522	35589	GE	U25C	C-C	1965	94
5623	NP 2523	35590	GE	U25C	C-C	1965	94
5624	NP 2524	35591	GE	U25C	C-C	1965	94
5625	NP 2525	35592	GE	U25C	C-C	1965	94
5626	NP 2526	35593	GE	U25C	C-C	1965	94
5627	NP 2527	35594	GE	U25C	C-C	1965	94
5628	NP 2528	35595	GE	U25C	C-C	1965	94
5629	NP 2529	35596	GE	U25C	C-C	1965	94
5630	Q 550	35597	GE	U25C	C-C	1965	94
5631	Q 551	35598	GE	U25C	C-C	1965	94
5632	Q 552	35599	GE	U25C	C-C	1965	94
5633	Q 553	35600	GE	U25C	C-C	1965	94
5634	Q 554	35601	GE	U25C	C-C	1965	94
5635	Q 555	35602	GE	U25C	C-C	1965	94
5636	Q 556	35603	GE	U25C	C-C	1965	94
5637	Q 557	35604	GE	U25C	C-C	1965	94
5638	Q 558	35605	GE	U25C	C-C	1965	94
5639	Q 559	35606	GE	U25C	C-C	1965	94
5640	Q 560	35607	GE	U25C	C-C	1965	94
5641	Q 561	35608	GE	U25C	C-C	1965	94

— INDEX —

B.N. ENG. NUMBER	PREVIOUS NUMBER	SERIAL NUMBER	BLDR.	MODEL	AAR DESIG'N.	YEAR	PAGE
5650	Q 562	35751	GE	U28C	C-C	1966	97
5651	Q 563	35752	GE	U28C	C-C	1966	97
5652	Q 564	35753	GE	U28C	C-C	1966	97
5653	Q 565	35754	GE	U28C	C-C	1966	97
5654	Q 566	35755	GE	U28C	C-C	1966	97
5655	Q 567	35756	GE	U28C	C-C	1966	97
5656	Q 568	35757	GE	U28C	C-C	1966	97
5657	Q 569	35758	GE	U28C	C-C	1966	97
5658	Q 570	35759	GE	U28C	C-C	1966	97
5659	Q 571	35760	GE	U28C	C-C	1966	97
5660	Q 572	35815	GE	U28C	C-C	1966	97
5661	Q 573	35816	GE	U28C	C-C	1966	97
5662	Q 574	35817	GE	U28C	C-C	1966	97
5663	Q 575	35818	GE	U28C	C-C	1966	97
5664	Q 576	35819	GE	U28C	C-C	1966	97
5665	Q 577	35820	GE	U28C	C-C	1966	97
5666	NP 2800	35630	GE	U28C	C-C	1966	97
5667	NP 2801	35631	GE	U28C	C-C	1966	97
5668	NP 2802	35882	GE	U28C	C-C	1966	97
5670	NP 2804	35884	GE	U-28C	C-C	1966	97
5671	NP 2805	35885	GE	U28C	C-C	1966	97
5672	NP 2806	35886	GE	U28C	C-C	1966	97
5673	NP 2807	35887	GE	U28C	C-C	1966	97
5674	NP 2808	35888	GE	U28C	C-C	1966	97
5675	NP 2809	35889	GE	U28C	C-C	1966	97
5676	NP 2810	35890	GE	U28C	C-C	1966	97
5677	NP 2811	35891	GE	U28C	C-C	1966	97

— INDEX —

B.N. ENG. NUMBER	PREVIOUS NUMBER	SERIAL NUMBER	BLDR.	MODEL	AAR DESIG'N.	YEAR	PAGE
5700	GN 2530	36776	GE	U33C	C-C	1968	104

B.N. ENG. NUMBER	PREVIOUS NUMBER	SERIAL NUMBER	BLDR.	MODEL	AAR DESIG'N.	YEAR	PAGE
5702	GN 2532	36778	GE	U33C	C-C	1968	104
5703	GN 2533	36779	GE	U33C	C-C	1968	104
5704	GN 2534	36780	GE	U33C	C-C	1968	104
5705	GN 2535	36781	GE	U33C	C-C	1968	104
5706	GN 2536	36782	GE	U33C	C-C	1968	104
5707	GN 2537	36783	GE	U33C	C-C	1968	104
5708	GN 2538	36784	GE	U33C	C-C	1968	104
5709	GN 2539	37026	GE	U33C	C-C	1969	104
5710	GN 2540	37027	GE	U33C	C-C	1969	104
5711	GN 2541	37028	GE	U33C	C-C	1969	104
5712	GN 2542	37029	GE	U33C	C-C	1969	104
5713	GN 2543	37030	GE	U33C	C-C	1969	104
5714	GN 2544	37031	GE	U33C	C-C	1969	104
5715	NP 3300	37118	GE	U33C	C-C	1969	104
5716	NP 3301	37119	GE	U33C	C-C	1969	104
5717	NP 3302	37120	GE	U33C	C-C	1969	104

– INDEX –

B.N. ENG. NUMBER	PREVIOUS NUMBER	SERIAL NUMBER	BLDR.	MODEL	AAR DESIG'N.	YEAR	PAGE
5718	NP 3303	37121	GE	U33C	C-C	1969	104
5719	NP 3304	37122	GE	U33C	C-C	1969	104
5720	NP 3305	37123	GE	U33C	C-C	1969	104
5721	NP 3306	37124	GE	U33C	C-C	1969	104
5722	NP 3307	37125	GE	U33C	C-C	1969	104
5723	NP 3308	37126	GE	U33C	C-C	1969	104
5724	NP 3309	37127	GE	U33C	C-C	1969	104
5725	–	37685	GE	U33C	C-C	1971	104
5726	–	37686	GE	U33C	C-C	1971	104
5727	–	37687	GE	U33C	C-C	1971	104
5728	–	37688	GE	U33C	C-C	1971	104
5729	–	37689	GE	U33C	C-C	1971	104
5730	–	37690	GE	U33C	C-C	1971	104
5731	–	37691	GE	U33C	C-C	1971	104
5732	–	37692	GE	U33C	C-C	1971	104
5733	–	37693	GE	U33C	C-C	1971	104
5734	–	37694	GE	U33C	C-C	1971	104
5735	–	37695	GE	U33C	C-C	1971	104
5736	–	37973	GE	U33C	C-C	1971	104
5737	–	37974	GE	U33C	C-C	1971	104
5738	–	37975	GE	U33C	C-C	1971	104
5739	–	37976	GE	U33C	C-C	1971	104
5740	–	37977	GE	U33C	C-C	1971	104
5741	–	37978	GE	U33C	C-C	1971	104
5742	–	37979	GE	U33C	C-C	1971	104
5743	–	37980	GE	U33C	C-C	1971	104
5744	–	37981	GE	U33C	C-C	1971	104
5745	–	37982	GE	U33C	C-C	1971	104
5746	–	37983	GE	U33C	C-C	1971	104
5747	–	37984	GE	U33C	C-C	1971	104
5748	–	37985	GE	U33C	C-C	1971	104
5749	–	37986	GE	U33C	C-C	1971	104
5750	–	37987	GE	U33C	C-C	1971	104
5751	–	37988	GE	U33C	C-C	1971	104

— INDEX —

B.N. ENG. NUMBER	PREVIOUS NUMBER	SERIAL NUMBER	BLDR.	MODEL	AAR DESIG'N.	YEAR	PAGE
5752	–	37989	GE	U33C	C-C	1971	104
5753	–	37990	GE	U33C	C-C	1971	104
5754	–	37991	GE	U33C	C-C	1971	104
5755	–	37992	GE	U33C	C-C	1971	104
5756	–	37993	GE	U33C	C-C	1971	104
5757	–	37994	GE	U33C	C-C	1971	104
5758	–	37995	GE	U33C	C-C	1971	104
5759	–	37996	GE	U33C	C-C	1971	104
5760	–	37997	GE	U33C	C-C	1971	104
5761	–	37998	GE	U33C	C-C	1971	104
5762	–	37999	GE	U33C	C-C	1971	104
5763	–	38000	GE	U33C	C-C	1971	104
5764	–	37366	GE	U33C	C-C	1969	104
5765	–	37367	GE	U33C	C-C	1969	104

B.N. ENG. NUMBER	PREVIOUS NUMBER	SERIAL NUMBER	BLDR.	MODEL	AAR DESIG'N.	YEAR	PAGE

— INDEX —

B.N. ENG. NUMBER	PREVIOUS NUMBER	SERIAL NUMBER	BLDR.	MODEL	AAR DESIG'N.	YEAR	PAGE
5800	BN 5300	38241	GE	U30C	C-C	1972	102
5801	BN 5301	38242	GE	U30C	C-C	1972	102
5802	BN 5302	38243	GE	U30C	C-C	1972	102
5803	BN 5303	38244	GE	U30C	C-C	1972	102
5804	BN 5304	38245	GE	U30C	C-C	1972	102
5805	BN 5305	38246	GE	U30C	C-C	1972	102
5806	–	39289	GE	U30C	C-C	1973	102
5807	–	39290	GE	U30C	C-C	1973	102
5808	–	39291	GE	U30C	C-C	1973	102
5809	–	39292	GE	U30C	C-C	1973	102
5810	–	39293	GE	U30C	C-C	1973	102
5811	–	39294	GE	U30C	C-C	1973	102
5812	–	39295	GE	U30C	C-C	1973	102
5813	–	39296	GE	U30C	C-C	1973	102
5814	–	39419	GE	U30C	C-C	1973	102
5815	–	39420	GE	U30C	C-C	1973	102
5816	–	39421	GE	U30C	C-C	1973	102
5817	–	39422	GE	U30C	C-C	1973	102
5818	–	39423	GE	U30C	C-C	1973	102
5819	–	39424	GE	U30C	C-C	1973	102

— INDEX —

B.N. ENG. NUMBER	PREVIOUS NUMBER	SERIAL NUMBER	BLDR.	MODEL	AAR DESIG'N.	YEAR	PAGE
5820	–	39425	GE	U30C	C-C	1973	102
5821	–	39426	GE	U30C	C-C	1973	102
5822	–	39427	GE	U30C	C-C	1973	102
5823	–	39428	GE	U30C	C-C	1973	102
5824	–	39713	GE	U30C	C-C	1974	102
5825	–	39715	GE	U30C	C-C	1974	102
5826	–	39717	GE	U30C	C-C	1974	102
5827	–	39719	GE	U30C	C-C	1974	102
5928	–	39721	GE	U30C	C-C	1974	102
5829	–	39723	GE	U30C	C-C	1974	102
5830	–	39725	GE	U30C	C-C	1974	102
5831	–	39727	GE	U30C	C-C	1974	102
5832	–	39729	GE	U30C	C-C	1974	102
5833	–	39731	GE	U30C	C-C	1974	102
5834	–	40396	GE	U30C	C-C	1975	102
5835	–	40398	GE	U30C	C-C	1975	102
5836	–	40600	GE	U30C	C-C	1975	102
5837	–	40602	GE	U30C	C-C	1975	102
5838	–	40604	GE	U30C	C-C	1975	102
5839	–	40606	GE	U30C	C-C	1975	102

— INDEX —

B.N. ENG. NUMBER	PREVIOUS NUMBER	SERIAL NUMBER	BLDR.	MODEL	AAR DESIG'N.	YEAR	PAGE
5900	BN 5353	38574	GE	U30C	C-C	1972	102
5901	BN 5354	38575	GE	U30C	C-C	1972	102
5903	BN 5356	38577	GE	U30C	C-C	1972	102
5904	BN 5357	38578	GE	U30C	C-C	1972	102

B.N. ENG. NUMBER	PREVIOUS NUMBER	SERIAL NUMBER	BLDR.	MODEL	AAR DESIG'N.	YEAR	PAGE
5905	BN 5358	38579	GE	U30C	C-C	1972	102
5906	BN 5359	38580	GE	U30C	C-C	1972	102
5907	BN 5360	38581	GE	U30C	C-C	1972	102
5908	BN 5361	38582	GE	U30C	C-C	1972	102
5909	BN 5362	38583	GE	U30C	C-C	1972	102
5910	BN 5363	38584	GE	U30C	C-C	1972	102
5911	BN 5364	38585	GE	U30C	C-C	1972	102
5912	BN 5365	39282	GE	U30C	C-C	1973	102
5914	BN 5367	39284	GE	U30C	C-C	1973	102
5915	BN 5368	39285	GE	U30C	C-C	1973	102
5916	BN 5369	39286	GE	U30C	C-C	1973	102
5917	BN 5370	39287	GE	U30C	C-C	1973	102
5918	BN 5371	39288	GE	U30C	C-C	1973	102
5919	–	39429	GE	U30C	C-C	1973	102
5920	–	39430	GE	U30C	C-C	1973	102
5921	–	39431	GE	U30C	C-C	1973	102

— INDEX —

B.N. ENG. NUMBER	PREVIOUS NUMBER	SERIAL NUMBER	BLDR.	MODEL	AAR DESIG'N.	YEAR	PAGE
5922	–	39432	GE	U30C	C-C	1973	102
5923	–	39433	GE	U30C	C-C	1973	102
5924	–	39434	GE	U30C	C-C	1973	102
5925	–	39435	GE	U30C	C-C	1973	102
5926	–	39436	GE	U30C	C-C	1973	102
5927	–	39437	GE	U30C	C-C	1973	102
5928	–	39438	GE	U30C	C-C	1973	102
5929	–	39714	GE	U30C	C-C	1974	102
5930	–	39716	GE	U30C	C-C	1974	102
5931	–	39718	GE	U30C	C-C	1974	102
5932	–	39720	GE	U30C	C-C	1974	102
5933	–	39722	GE	U30C	C-C	1974	102
5934	–	39724	GE	U30C	C-C	1974	102
5935	–	39726	GE	U30C	C-C	1974	102
5936	–	39728	GE	U30C	C-C	1974	102
5937	–	39730	GE	U30C	C-C	1974	102
5938	–	39732	GE	U30C	C-C	1974	102
5939	–	40397	GE	U30C	C-C	1975	102
5940	–	40399	GE	U30C	C-C	1975	102
5941	–	40601	GE	U30C	C-C	1975	102
5942	–	40603	GE	U30C	C-C	1975	102
5943	–	40605	GE	U30C	C-C	1975	102
5944	–	40607	GE	U30C	C-C	1975	102

— INDEX —

B.N. ENG. NUMBER	PREVIOUS NUMBER	SERIAL NUMBER	BLDR.	MODEL	AAR DESIG'N.	YEAR	PAGE
6000	GN 550	16099	EMD	SD-7	C-C	1952	74
6001	GN 551	16100	EMD	SD-7	C-C	1952	74
6002	GN 552	16101	EMD	SD-7	C-C	1952	74
6003	GN 553	16102	EMD	SD-7	C-C	1952	74
6004	GN 554	16103	EMD	SD-7	C-C	1952	74
6005	GN 555	16104	EMD	SD-7	C-C	1952	74
6006	GN 556	16105	EMD	SD-7	C-C	1952	74

B.N. ENG. NUMBER	PREVIOUS NUMBER	SERIAL NUMBER	BLDR.	MODEL	AAR DESIG'N.	YEAR	PAGE
6007	GN 557	16106	EMD	SD-7	C-C	1952	74
6008	GN 558	16107	EMD	SD-7	C-C	1952	74
6009	GN 559	16108	EMD	SD-7	C-C	1952	74
6010	GN 560	16109	EMD	SD-7	C-C	1952	74
6011	GN 561	16110	EMD	SD-7	C-C	1952	74
6012	GN 562	16111	EMD	SD-7	C-C	1952	74
6013	GN 563	16112	EMD	SD-7	C-C	1952	74
6014	GN 564	16113	EMD	SD-7	C-C	1952	74
6015	GN 565	17896	EMD	SD-7	C-C	1952	74
6016	GN 566	17897	EMD	SD-7	C-C	1953	74
6017	GN 567	17898	EMD	SD-7	C-C	1953	74
6018	GN 568	17899	EMD	SD-7	C-C	1953	74
6019	GN 569	17900	EMD	SD-7	C-C	1953	74
6020	GN 570	17901	EMD	SD-7	C-C	1953	74
6021	GN 571	17902	EMD	SD-7	C-C	1953	74
6022	GN 572	17903	EMD	SD-7	C-C	1953	74
6023	Q 300	18320	EMD	SD-7	C-C	1953	74

— INDEX —

B.N. ENG. NUMBER	PREVIOUS NUMBER	SERIAL NUMBER	BLDR.	MODEL	AAR DESIG'N.	YEAR	PAGE
6024	Q301	18321	EMD	SD-7	C-C	1953	74
6025	Q 302	18322	EMD	SD-7	C-C	1953	74
6026	Q 303	18323	EMD	SD-7	C-C	1953	74
6027	Q 304	18324	EMD	SD-7	C-C	1953	74
6028	Q 305	18325	EMD	SD-7	C-C	1953	74
6029	Q 306	18326	EMD	SD-7	C-C	1953	74
6030	Q 307	18327	EMD	SD-7	C-C	1953	74
6031	Q 308	18328	EMD	SD-7	C-C	1953	74
6032	Q 309	18329	EMD	SD-7	C-C	1953	74
6033	Q 310	18330	EMD	SD-7	C-C	1953	74
6034	Q 311	18331	EMD	SD-7	C-C	1953	74
6035	Q 312	18332	EMD	SD-7	C-C	1953	74
6036	Q 313	18333	EMD	SD-7	C-C	1953	74
6037	Q 314	18334	EMD	SD-7	C-C	1953	74
6038	Q 315	18335	EMD	SD-7	C-C	1953	74
6039	Q 316	18336	EMD	SD-7	C-C	1953	74
6040	Q 317	18337	EMD	SD-7	C-C	1953	74
6041	Q 318	18338	EMD	SD-7	C-C	1953	74
6042	Q 319	18339	EMD	SD-7	C-C	1953	74
6043	Q 320	18340	EMD	SD-7	C-C	1953	74
6044	Q 321	18341	EMD	SD-7	C-C	1953	74
6045	Q 322	18342	EMD	SD-7	C-C	1953	74
6046	Q 323	18343	EMD	SD-7	C-C	1953	74
6047	Q 324	18344	EMD	SD-7	C-C	1953	74
6048	Q 400	17396	EMD	SD-7	C-C	1952	74
6049	Q 401	17397	EMD	SD-7	C-C	1952	74
6050	Q 402	17398	EMD	SD-7	C-C	1952	74
6051	Q 403	17399	EMD	SD-7	C-C	1952	74
6052	Q 404	17400	EMD	SD-7	C-C	1952	74
6053	Q 405	17401	EMD	SD-7	C-C	1952	74
6054	Q 406	17402	EMD	SD-7	C-C	1952	74
6055	Q 407	17403	EMD	SD-7	C-C	1952	74
6056	Q 408	17404	EMD	SD-7	C-C	1952	74
6057	Q 409	17405	EMD	SD-7	C-C	1952	74

— INDEX —

B.N. ENG. NUMBER	PREVIOUS NUMBER	SERIAL NUMBER	BLDR.	MODEL	AAR DESIG'N.	YEAR	PAGE
6058	Q 410	17406	EMD	SD-7	C-C	1952	74
6059	Q 411	17407	EMD	SD-7	C-C	1952	74

B.N. ENG. NUMBER	PREVIOUS NUMBER	SERIAL NUMBER	BLDR.	MODEL	AAR DESIG'N.	YEAR	PAGE

— INDEX —

B.N. ENG. NUMBER	PREVIOUS NUMBER	SERIAL NUMBER	BLDR.	MODEL	AAR DESIG'N.	YEAR	PAGE
6100	GN 573	19340	EMD	SD-9	C-C	1954	76
6101	GN 574	19341	EMD	SD-9	C-C	1954	76
6102	GN 575	19342	EMD	SD-9	C-C	1954	76
6103	GN 576	19343	EMD	SD-9	C-C	1954	76

B.N. ENG. NUMBER	PREVIOUS NUMBER	SERIAL NUMBER	BLDR.	MODEL	AAR DESIG'N.	YEAR	PAGE
6104	GN 577	19344	EMD	SD-9	C-C	1954	76
6105	GN 578	19345	EMD	SD-9	C-C	1954	76
6106	GN 579	21247	EMD	SD-9	C-C	1956	76
6107	GN 580	21248	EMD	SD-9	C-C	1956	76
6108	GN 581	21249	EMD	SD-9	C-C	1956	76
6109	GN 582	21250	EMD	SD-9	C-C	1956	76
6110	GN 583	21251	EMD	SD-9	C-C	1956	76
6111	GN 584	22486	EMD	SD-9	C-C	1957	76
6112	GN 585	22487	EMD	SD-9	C-C	1957	76
6113	GN 586	22488	EMD	SD-9	C-C	1957	76
6114	GN 587	22489	EMD	SD-9	C-C	1957	76
6115	GN 588	22490	EMD	SD-9	C-C	1957	76
6116	GN 589	22491	EMD	SD-9	C-C	1957	76
6117	GN 590	24092	EMD	SD-9	C-C	1958	76
6118	GN 591	24093	EMD	SD-9	C-C	1958	76
6119	GN 592	24094	EMD	SD-9	C-C	1958	76
6120	GN 593	24095	EMD	SD-9	C-C	1958	76

— INDEX —

B.N. ENG. NUMBER	PREVIOUS NUMBER	SERIAL NUMBER	BLDR.	MODEL	AAR DESIG'N.	YEAR	PAGE
6121	GN 594	24096	EMD	SD-9	C-C	1958	76
6122	GN 595	24097	EMD	SD-9	C-C	1958	76
6123	GN 596	24098	EMD	SD-9	C-C	1958	76
6124	GN 597	24099	EMD	SD-9	C-C	1958	76
6125	GN 598	24100	EMD	SD-9	C-C	1958	76
6126	GN 599	24101	EMD	SD-9	C-C	1958	76
6127	Q 325	18984	EMD	SD-9	C-C	1954	76
6128	Q 326	18985	EMD	SD-9	C-C	1954	76
6129	Q 327	18986	EMD	SD-9	C-C	1954	76
6130	Q 328	18987	EMD	SD-9	C-C	1954	76
6131	Q 329	18988	EMD	SD-9	C-C	1954	76
6132	Q 330	18989	EMD	SD-9	C-C	1954	76
6133	Q 331	18990	EMD	SD-9	C-C	1954	76
6134	Q 332	18991	EMD	SD-9	C-C	1954	76
6135	Q 333	18992	EMD	SD-9	C-C	1954	76
6137	Q 335	18994	EMD	SD-9	C-C	1954	76

B.N. ENG. NUMBER	PREVIOUS NUMBER	SERIAL NUMBER	BLDR.	MODEL	AAR DESIG'N.	YEAR	PAGE
6138	Q 336	18995	EMD	SD-9	C-C	1954	76
6139	Q 337	18996	EMD	SD-9	C-C	1954	76
6140	Q 338	18997	EMD	SD-9	C-C	1954	76
6141	Q 339	18998	EMD	SD-9	C-C	1954	76
6142	Q 340	18999	EMD	SD-9	C-C	1954	76
6143	Q 341	19000	EMD	SD-9	C-C	1954	76
6144	Q 342	19001	EMD	SD-9	C-C	1954	76
6145	Q 343	19002	EMD	SD-9	C-C	1954	76
6146	Q 344	19003	EMD	SD-9	C-C	1954	76
6147	Q 345	20555	EMD	SD-9	C-C	1955	76
6148	Q 346	20556	EMD	SD-9	C-C	1955	76
6149	Q 347	20557	EMD	SD-9	C-C	1955	76
6150	Q 348	20558	EMD	SD-9	C-C	1955	76
6151	Q 349	20559	EMD	SD-9	C-C	1955	76
6152	Q 350	20560	EMD	SD-9	C-C	1955	76
6153	Q 351	20561	EMD	SD-9	C-C	1955	76
6154	Q 352	20562	EMD	SD-9	C-C	1955	76

— INDEX —

B.N. ENG. NUMBER	PREVIOUS NUMBER	SERIAL NUMBER	BLDR.	MODEL	AAR DESIG'N.	YEAR	PAGE
6155	Q 353	20563	EMD	SD-9	C-C	1955	76
6156	Q 354	20564	EMD	SD-9	C-C	1955	76
6157	Q 355	20565	EMD	SD-9	C-C	1955	76
6158	Q 356	20566	EMD	SD-9	C-C	1955	76
6159	Q 357	20567	EMD	SD-9	C-C	1955	76
6160	Q 358	20568	EMD	SD-9	C-C	1955	76
6161	Q 359	20569	EMD	SD-9	C-C	1955	76
6162	Q 360	20570	EMD	SD-9	C-C	1955	76
6163	Q 361	20571	EMD	SD-9	C-C	1955	76
6164	Q 362	20572	EMD	SD-9	C-C	1955	76
6165	Q 363	20573	EMD	SD-9	C-C	1955	76
6166	Q 364	20574	EMD	SD-9	C-C	1955	76
6167	Q 365	20575	EMD	SD-9	C-C	1955	76
6168	Q 366	20576	EMD	SD-9	C-C	1955	76
6169	Q 367	20577	EMD	SD-9	C-C	1955	76
6170	Q 368	20578	EMD	SD-9	C-C	1955	76
6171	Q 369	20579	EMD	SD-9	C-C	1955	76
6172	Q 370	25080	EMD	SD-9	C-C	1955	76
6173	Q 371	25081	EMD	SD-9	C-C	1955	76
6174	Q 372	25082	EMD	SD-9	C-C	1955	76
6175	Q 373	25083	EMD	SD-9	C-C	1955	76
6176	Q 374	25084	EMD	SD-9	C-C	1955	76
6177	Q 430	23609	EMD	SD-9	C-C	1957	76
6178	Q 431	23610	EMD	SD-9	C-C	1957	76
6179	Q 432	23611	EMD	SD-9	C-C	1957	76
6180	Q 433	23612	EMD	SD-9	C-C	1957	76
6181	Q 434	23613	EMD	SD-9	C-C	1957	76
6182	Q 435	23614	EMD	SD-9	C-C	1957	76
6183	Q 436	23615	EMD	SD-9	C-C	1957	76
6184	Q 437	23616	EMD	SD-9	C-C	1957	76
6185	Q 438	23617	EMD	SD-9	C-C	1957	76
6186	Q 439	23618	EMD	SD-9	C-C	1957	76
6187	Q 440	23619	EMD	SD-9	C-C	1957	76
6188	Q 441	23620	EMD	SD-9	C-C	1957	76

— INDEX —

B.N. ENG. NUMBER	PREVIOUS NUMBER	SERIAL NUMBER	BLDR.	MODEL	AAR DESIG'N.	YEAR	PAGE
6189	Q 442	23621	EMD	SD-9	C-C	1957	76
6190	Q 443	23622	EMD	SD-9	C-C	1957	76
6191	Q 444	23623	EMD	SD-9	C-C	1957	76
6192	Q 445	23624	EMD	SD-9	C-C	1957	76
6193	Q 446	23625	EMD	SD-9	C-C	1957	76
6194	Q 447	23626	EMD	SD-9	C-C	1957	76
6195	Q 448	23627	EMD	SD-9	C-C	1957	76
6196	Q 449	23628	EMD	SD-9	C-C	1957	76
6197	Q 450	23629	EMD	SD-9	C-C	1957	76
6198	Q 451	23630	EMD	SD-9	C-C	1957	76
6199	Q 452	23631	EMD	SD-9	C-C	1957	76
6200	Q 453	23632	EMD	SD-9	C-C	1957	76
6201	Q 454	23633	EMD	SD-9	C-C	1957	76
6202	Q 455	23634	EMD	SD-9	C-C	1957	76
6203	Q 456	23635	EMD	SD-9	C-C	1957	76
6204	Q 457	23636	EMD	SD-9	C-C	1957	76
6205	Q 458	23637	EMD	SD-9	C-C	1957	76
6206	Q 459	23638	EMD	SD-9	C-C	1957	76

— INDEX —

B.N. ENG. NUMBER	PREVIOUS NUMBER	SERIAL NUMBER	BLDR.	MODEL	AAR DESIG'N.	YEAR	PAGE

B.N. ENG. NUMBER	PREVIOUS NUMBER	SERIAL NUMBER	BLDR.	MODEL	AAR DESIG'N.	YEAR	PAGE
6240	Q 500	25197	EMD	SD-24	C-C	1959	78
6241	Q 501	25198	EMD	SD-24	C-C	1959	78
6242	Q 502	25199	EMD	SD-24	C-C	1959	78
6243	Q 503	25200	EMD	SD-24	C-C	1959	78
6244	Q 504	25201	EMD	SD-24	C-C	1959	78
6245	Q 505	25202	EMD	SD-24	C-C	1959	78
6246	Q 506	25203	EMD	SD-24	C-C	1959	78
6247	Q 507	25204	EMD	SD-24	C-C	1959	78
6249	Q 509	25206	EMD	SD-24	C-C	1959	78
6250	Q 510	25207	EMD	SD-24	C-C	1959	78
6251	Q 511	25208	EMD	SD-24	C-C	1959	78
6252	Q 512	25209	EMD	SD-24	C-C	1959	78
6253	Q 513	25210	EMD	SD-24	C-C	1959	78
6254	Q 514	25211	EMD	SD-24	C-C	1959	78
6255	Q 515	25212	EMD	SD-24	C-C	1959	78

— INDEX —

B.N. ENG. NUMBER	PREVIOUS NUMBER	SERIAL NUMBER	BLDR.	MODEL	AAR DESIG'N.	YEAR	PAGE
6300	–	5801-1	EMD	SD-40	C-C	1971	80
6301	–	5801-2	EMD	SD-40	C-C	1971	80
6302	–	5801-3	EMD	SD-40	C-C	1971	80
6303	–	5801-4	EMD	SD-40	C-C	1971	80
6304	–	5801-5	EMD	SD-40	C-C	1971	80
6305	–	5801-6	EMD	SD-40	C-C	1971	80
6306	–	5801-7	EMD	SD-40	C-C	1971	80
6307	–	5801-8	EMD	SD-40	C-C	1971	80
6308	–	5801-9	EMD	SD-40	C-C	1971	80

B.N. ENG. NUMBER	PREVIOUS NUMBER	SERIAL NUMBER	BLDR.	MODEL	AAR DESIG'N.	YEAR	PAGE
6309	–	5801-10	EMD	SD-40	C-C	1971	80
6310	–	5801-11	EMD	SD-40	C-C	1971	80
6311	–	5801-12	EMD	SD-40	C-C	1971	80
6312	–	5801-13	EMD	SD-40	C-C	1971	80
6313	–	5801-14	EMD	SD-40	C-C	1971	80
6314	–	5801-15	EMD	SD-40	C-C	1971	80
6315	–	5801-16	EMD	SD-40	C-C	1971	80
6316	–	5801-17	EMD	SD-40	C-C	1971	80
6317	–	5801-18	EMD	SD-40	C-C	1971	80
6318	–	5801-19	EMD	SD-40	C-C	1971	80
6319	–	5801-20	EMD	SD-40	C-C	1971	80
6320	–	5801-21	EMD	SD-40	C-C	1971	80
6321	–	5801-22	EMD	SD-40	C-C	1971	80
6322	–	5801-23	EMD	SD-40	C-C	1971	80
6323	–	5801-24	EMD	SD-40	C-C	1971	80
6324	–	5801-25	EMD	SD-40	C-C	1971	80

— INDEX —

B.N. ENG. NUMBER	PREVIOUS NUMBER	SERIAL NUMBER	BLDR.	MODEL	AAR DESIG'N.	YEAR	PAGE
6326	–	5803-2	EMD	SD-40-2	C-C	1972	84
6327	–	5803-3	EMD	SD-40-2	C-C	1972	84
6328	–	5803-4	EMD	SD-40-2	C-C	1972	84
6329	–	5803-5	EMD	SD-40-2	C-C	1972	84
6330	–	5803-6	EMD	SD-40-2	C-C	1972	84
6331	–	5803-7	EMD	SD-40-2	C-C	1972	84
6332	–	5803-8	EMD	SD-40-2	C-C	1972	84
6333	–	5803-9	EMD	SD-40-2	C-C	1972	84
6334	–	5803-10	EMD	SD-40-2	C-C	1972	84

B.N. ENG. NUMBER	PREVIOUS NUMBER	SERIAL NUMBER	BLDR.	MODEL	AAR DESIG'N.	YEAR	PAGE

— INDEX —

B.N. ENG. NUMBER	PREVIOUS NUMBER	SERIAL NUMBER	BLDR.	MODEL	AAR DESIG'N.	YEAR	PAGE
6376	–	74600-1	EMD	SD-40-2	C-C	1974	84
6377	–	74600-2	EMD	SD-40-2	C-C	1974	84
6378	–	74600-3	EMD	SD-40-2	C-C	1974	84
6379	–	74600-4	EMD	SD-40-2	C-C	1974	84
6380	–	74600-5	EMD	SD-40-2	C-C	1974	84
6381	–	74600-6	EMD	SD-40-2	C-C	1974	84
6382	–	74600-7	EMD	SD-40-2	C-C	1974	84
6383	–	74600-8	EMD	SD-40-2	C-C	1974	84
6384	–	74600-9	EMD	SD-40-2	C-C	1974	84
6385	–	74600-10	EMD	SD-40-2	C-C	1974	84
6394	BN 9850	31592	EMD	SDP-40	C-C	1966	82
6395	BN 9851	31593	EMD	SDP-40	C-C	1966	82
6396	BN 9852	31594	EMD	SDP-40	C-C	1966	82
6398	BN 9854	31596	EMD	SDP-40	C-C	1966	82
6399	BN 9855	31597	EMD	SDP-40	C-C	1966	82

— INDEX —

B.N. ENG. NUMBER	PREVIOUS NUMBER	SERIAL NUMBER	BLDR.	MODEL	AAR DESIG'N.	YEAR	PAGE
6400	NP 3600	31951	EMD	SD-45	C-C	1966	86
6401	NP 3601	31952	EMD	SD-45	C-C	1966	86
6402	NP 3602	31953	EMD	SD-45	C-C	1966	86
6403	NP 3603	31954	EMD	SD-45	C-C	1966	86
6404	NP 3604	33025	EMD	SD-45	C-C	1967	86
6405	NP 3605	33026	EMD	SD-45	C-C	1967	86
6406	NP 3606	33027	EMD	SD-45	C-C	1967	86
6407	NP 3607	33028	EMD	SD-45	C-C	1967	86
6408	NP 3608	33029	EMD	SD-45	C-C	1967	86
6409	NP 3609	33030	EMD	SD-45	C-C	1967	86
6410	NP 3610	33031	EMD	SD-45	C-C	1967	86
6411	NP 3611	33032	EMD	SD-45	C-C	1967	86
6412	NP 3612	33033	EMD	SD-45	C-C	1967	86
6413	NP 3613	33034	EMD	SD-45	C-C	1967	86
6414	NP 3614	33035	EMD	SD-45	C-C	1967	86
6415	NP 3615	33036	EMD	SD-45	C-C	1967	86
6416	NP 3616	33037	EMD	SD-45	C-C	1967	86
6417	NP 3617	33038	EMD	SD-45	C-C	1967	86
6418	NP 3618	33039	EMD	SD-45	C-C	1967	86
6419	NP 3619	33040	EMD	SD-45	C-C	1967	86
6420	NP 3620	33900	EMD	SD-45	C-C	1968	86
6421	NP 3621	33901	EMD	SD-45	C-C	1968	86
6422	NP 3622	33902	EMD	SD-45	C-C	1968	86
6423	NP 3623	33903	EMD	SD-45	C-C	1968	86
6424	NP 3624	33904	EMD	SD-45	C-C	1968	86
6425	NP 3625	33905	EMD	SD-45	C-C	1968	86
6426	NP 3626	33906	EMD	SD-45	C-C	1968	86
6427	NP 3627	33907	EMD	SD-45	C-C	1968	86
6428	NP 3628	33908	EMD	SD-45	C-C	1968	86
6429	NP 3629	33909	EMD	SD-45	C-C	1968	86
6430	GN 400	31598	EMD	SD-45	C-C	1966	86
6431	GN 401	31599	EMD	SD-45	C-C	1966	86
6432	GN 402	31600	EMD	SD-45	C-C	1966	86
6433	GN 403	31601	EMD	SD-45	C-C	1966	86

— INDEX —

B.N. ENG. NUMBER	PREVIOUS NUMBER	SERIAL NUMBER	BLDR.	MODEL	AAR DESIG'N.	YEAR	PAGE
6434	GN 404	31602	EMD	SD-45	C-C	1966	86
6435	GN 405	31603	EMD	SD-45	C-C	1966	86
6436	GN 406	31604	EMD	SD-45	C-C	1966	86
6437	GN 407	31605	EMD	SD-45	C-C	1966	86
6438	GN 408	32988	EMD	SD-45	C-C	1967	86
6439	GN 409	32989	EMD	SD-45	C-C	1967	86
6440	GN 410	32990	EMD	SD-45	C-C	1967	86
6441	GN 411	32991	EMD	SD-45	C-C	1967	86
6442	GN 412	32992	EMD	SD-45	C-C	1967	86
6443	GN 413	32993	EMD	SD-45	C-C	1967	86
6444	GN 414	32994	EMD	SD-45	C-C	1967	86
6445	GN 415	32995	EMD	SD-45	C-C	1967	86
6446	GN 416	32996	EMD	SD-45	C-C	1967	86
6447	GN 417	32997	EMD	SD-45	C-C	1967	86
6448	GN 418	33785	EMD	SD-45	C-C	1968	86
6449	GN 419	33786	EMD	SD-45	C-C	1968	86
6450	GN 420	33787	EMD	SD-45	C-C	1968	86
6451	GN 421	33788	EMD	SD-45	C-C	1968	86
6452	GN 422	33789	EMD	SD-45	C-C	1968	86
6453	GN 423	33790	EMD	SD-45	C-C	1968	86
6454	GN 424	33791	EMD	SD-45	C-C	1968	86
6455	GN 425	33792	EMD	SD-45	C-C	1968	86
6456	GN 426	33793	EMD	SD-45	C-C	1968	86
6457	Q 516	34551	EMD	SD-45	C-C	1969	86
6458	Q 517	34552	EMD	SD-45	C-C	1969	86
6459	Q 518	34553	EMD	SD-45	C-C	1969	86
6460	Q 519	34554	EMD	SD-45	C-C	1969	86
6461	Q 520	34555	EMD	SD-45	C-C	1969	86
6462	Q 521	34556	EMD	SD-45	C-C	1969	86
6463	Q 522	34557	EMD	SD-45	C-C	1969	86
6464	Q 523	34558	EMD	SD-45	C-C	1969	86
6465	Q 524	34559	EMD	SD-45	C-C	1969	86
6466	Q 525	34560	EMD	SD-45	C-C	1969	86
6467	Q 526	34561	EMD	SD-45	C-C	1969	86

— INDEX —

B.N. ENG. NUMBER	PREVIOUS NUMBER	SERIAL NUMBER	BLDR.	MODEL	AAR DESIG'N.	YEAR	PAGE
6468	Q 527	34562	EMD	SD-45	C-C	1969	86
6469	Q 528	34563	EMD	SD-45	C-C	1969	86
6470	Q 529	34564	EMD	SD-45	C-C	1969	86
6471	Q 530	34565	EMD	SD-45	C-C	1969	86
6472	–	36361	EMD	SD-45	C-C	1970	86
6473	–	36362	EMD	SD-45	C-C	1970	86
6474	–	36363	EMD	SD-45	C-C	1970	86
6475	–	36364	EMD	SD-45	C-C	1970	86
6476	–	36365	EMD	SD-45	C-C	1970	86
6477	–	36366	EMD	SD-45	C-C	1970	86
6478	–	36367	EMD	SD-45	C-C	1970	86
6479	–	35368	EMD	SD-45	C-C	1970	86
6480	–	36369	EMD	SD-45	C-C	1970	86
6481	–	36370	EMD	SD-45	C-C	1970	86
6482	–	36371	EMD	SD-45	C-C	1970	86
6483	–	36372	EMD	SD-45	C-C	1970	86

B.N. ENG. NUMBER	PREVIOUS NUMBER	SERIAL NUMBER	BLDR.	MODEL	AAR DESIG'N.	YEAR	PAGE
6485	–	36374	EMD	SD-45	C-C	1970	86
6486	–	36375	EMD	SD-45	C-C	1970	86
6487	–	36376	EMD	SD-45	C-C	1970	86
6488	–	36377	EMD	SD-45	C-C	1970	86
6489	–	36378	EMD	SD-45	C-C	1970	86
6490	–	36379	EMD	SD-45	C-C	1970	86
6491	–	36380	EMD	SD-45	C-C	1970	86
6492	–	36794	EMD	SD-45	C-C	1970	86
6493	–	36795	EMD	SD-45	C-C	1970	86
6494	–	36796	EMD	SD-45	C-C	1970	86
6495	–	36797	EMD	SD-45	C-C	1970	86
6496	–	36798	EMD	SD-45	C-C	1970	86
6497	–	36799	EMD	SD-45	C-C	1970	86
6498	–	37106	EMD	SD-45	C-C	1971	86
6499	–	37107	EMD	SD-45	C-C	1971	86
6500	–	37108	EMD	SD-45	C-C	1971	86
6501	–	37109	EMD	SD-45	C-C	1971	86

— INDEX —

B.N. ENG. NUMBER	PREVIOUS NUMBER	SERIAL NUMBER	BLDR.	MODEL	AAR DESIG'N.	YEAR	PAGE
6502	–	37110	EMD	SD-45	C-C	1971	86
6503	–	37111	EMD	SD-45	C-C	1971	86
6504	–	37112	EMD	SD-45	C-C	1971	86
6505	–	37113	EMD	SD-45	C-C	1971	86
6506	–	37114	EMD	SD-45	C-C	1971	86
6507	–	37115	EMD	SD-45	C-C	1971	86
6508	–	37116	EMD	SD-45	C-C	1971	86
6509	–	37117	EMD	SD-45	C-C	1971	86
6510	–	37118	EMD	SD-45	C-C	1971	86
6511	–	37119	EMD	SD-45	C-C	1971	86
6512	–	37120	EMD	SD-45	C-C	1971	86
6513	–	37121	EMD	SD-45	C-C	1971	86
6514	–	37122	EMD	SD-45	C-C	1971	86
6515	–	37123	EMD	SD-45	C-C	1971	86
6516	–	37124	EMD	SD-45	C-C	1971	86
6517	–	37125	EMD	SD-45	C-C	1971	86
6518	–	37126	EMD	SD-45	C-C	1971	86
6519	–	37127	EMD	SD-45	C-C	1971	86
6520	–	37128	EMD	SD-45	C-C	1971	86
6521	–	37129	EMD	SD-45	C-C	1971	86
6522	–	37130	EMD	SD-45	C-C	1971	86
6523	–	37131	EMD	SD-45	C-C	1971	86
6524	–	37132	EMD	SD-45	C-C	1971	86
6525	–	37133	EMD	SD-45	C-C	1971	86
6526	–	37134	EMD	SD-45	C-C	1971	86
6527	–	37135	EMD	SD-45	C-C	1971	86
6529	–	37137	EMD	SD-45	C-C	1971	86
6530	–	37138	EMD	SD-45	C-C	1971	86
6531	–	37139	EMD	SD-45	C-C	1971	86
6532	–	37140	EMD	SD-45	C-C	1971	86
6533	–	37141	EMD	SD-45	C-C	1971	86
6534	–	37142	EMD	SD-45	C-C	1971	86
6535	–	37143	EMD	SD-45	C-C	1971	86

— INDEX —

B.N. ENG. NUMBER	PREVIOUS NUMBER	SERIAL NUMBER	BLDR.	MODEL	AAR DESIG'N.	YEAR	PAGE
6536	–	37144	EMD	SD-45	C-C	1971	86
6537	–	37145	EMD	SD-45	C-C	1971	86
6538	–	37146	EMD	SD-45	C-C	1971	86
6539	–	37147	EMD	SD-45	C-C	1971	86
6540	–	37148	EMD	SD-45	C-C	1971	86
6541	–	37149	EMD	SD-45	C-C	1971	86
6542	–	37150	EMD	SD-45	C-C	1971	86
6543	–	5794-1	EMD	SD-45	C-C	1971	86
6544	–	5794-2	EMD	SD-45	C-C	1971	86
6545	–	5794-3	EMD	SD-45	C-C	1971	86
6546	–	5794-4	EMD	SD-45	C-C	1971	86
6547	–	5794-5	EMD	SD-45	C-C	1971	86
6548	–	5794-6	EMD	SD-45	C-C	1971	86
6549	–	5794-7	EMD	SD-45	C-C	1971	86
6550	–	5794-8	EMD	SD-45	C-C	1971	86
6551	–	5794-9	EMD	SD-45	C-C	1971	86
6552	–	5794-10	EMD	SD-45	C-C	1971	86
6553	–	5794-11	EMD	SD-45	C-C	1971	86
6554	–	5794-12	EMD	SD-45	C-C	1971	86
6555	–	5794-13	EMD	SD-45	C-C	1971	86
6556	–	5794-14	EMD	SD-45	C-C	1971	86
6557	–	5794-15	EMD	SD-45	C-C	1971	86
6558	–	5794-16	EMD	SD-45	C-C	1971	86
6559	–	5794-17	EMD	SD-45	C-C	1971	86
6560	–	5794-18	EMD	SD-45	C-C	1971	86
6561	–	5794-19	EMD	SD-45	C-C	1971	86
6562	–	5794-20	EMD	SD-45	C-C	1971	86
6563	–	5794-21	EMD	SD-45	C-C	1971	86
6564	–	5794-22	EMD	SD-45	C-C	1971	86
6565	–	5794-23	EMD	SD-45	C-C	1971	86
6566	–	5794-24	EMD	SD-45	C-C	1971	86
6567	–	5794-25	EMD	SD-45	C-C	1971	86

— INDEX —

B.N. ENG. NUMBER	PREVIOUS NUMBER	SERIAL NUMBER	BLDR.	MODEL	AAR DESIG'N.	YEAR	PAGE

B.N. ENG. NUMBER	PREVIOUS NUMBER	SERIAL NUMBER	BLDR.	MODEL	AAR DESIG'N.	YEAR	PAGE
6592	BN 9856	33041	EMD	SDP-45	C-C	1967	88
6593	BN 9857	33042	EMD	SDP-45	C-C	1967	88
6594	BN 9858	33043	EMD	SDP-45	C-C	1967	88
6595	BN 9859	33044	EMD	SDP-45	C-C	1967	88
6596	BN 9860	33045	EMD	SDP-45	C-C	1967	88
6597	BN 9861	33046	EMD	SDP-45	C-C	1967	88
6598	BN 9862	33047	EMD	SDP-45	C-C	1967	88
6599	BN 9863	33048	EMD	SDP-45	C-C	1967	88
6600	GN 427	34736	EMD	F-45	C-C	1969	50
6601	GN 428	34737	EMD	F-45	C-C	1969	50
6602	GN 429	34738	EMD	F-45	C-C	1969	50
6603	GN 430	34739	EMD	F-45	C-C	1969	50

– INDEX –

B.N. ENG. NUMBER	PREVIOUS NUMBER	SERIAL NUMBER	BLDR.	MODEL	AAR DESIG'N.	YEAR	PAGE
6604	GN 431	34740	EMD	F-45	C-C	1969	50
6605	GN 432	34741	EMD	F-45	C-C	1969	50
6606	GN 433	35110	EMD	F-45	C-C	1969	50
6607	GN 434	35111	EMD	F-45	C-C	1969	50
6608	GN 435	35112	EMD	F-45	C-C	1969	50
6609	GN 436	35113	EMD	F-45	C-C	1969	50
6610	GN 437	35114	EMD	F-45	C-C	1969	50
6611	GN 438	35115	EMD	F-45	C-C	1969	50
6612	GN 439	35116	EMD	F-45	C-C	1969	50
6613	GN 440	35117	EMD	F-45	C-C	1969	50
6614	–	36341	EMD	F-45	C-C	1970	50
6615	–	36342	EMD	F-45	C-C	1970	50
6616	–	36343	EMD	F-45	C-C	1970	50
6617	–	36344	EMD	F-45	C-C	1970	50
6618	–	36345	EMD	F-45	C-C	1970	50
6619	–	36346	EMD	F-45	C-C	1970	50
6620	–	36347	EMD	F-45	C-C	1970	50

B.N. ENG. NUMBER	PREVIOUS NUMBER	SERIAL NUMBER	BLDR.	MODEL	AAR DESIG'N.	YEAR	PAGE
6621	–	36348	EMD	F-45	C-C	1970	50
6622	–	36349	EMD	F-45	C-C	1970	50
6623	–	36350	EMD	F-45	C-C	1970	50
6624	–	36351	EMD	F-45	C-C	1970	50
6625	–	36352	EMD	F-45	C-C	1970	50
6626	–	37166	EMD	F-45	C-C	1971	50
6627	–	37167	EMD	F-45	C-C	1971	50
6628	–	37168	EMD	F-45	C-C	1971	50
6629	–	37169	EMD	F-45	C-C	1971	50
6630	–	37170	EMD	F-45	C-C	1971	50
6631	–	37171	EMD	F-45	C-C	1971	50
6632	–	37172	EMD	F-45	C-C	1971	50
6633	–	37173	EMD	F-45	C-C	1971	50
6634	–	37174	EMD	F-45	C-C	1971	50
6635	–	37175	EMD	F-45	C-C	1971	50
6636	–	37176	EMD	F-45	C-C	1971	50
6637	–	37177	EMD	F-45	C-C	1971	50

— INDEX —

B.N. ENG. NUMBER	PREVIOUS NUMBER	SERIAL NUMBER	BLDR.	MODEL	AAR DESIG'N.	YEAR	PAGE
6638	–	37178	EMD	F-45	C-C	1971	50
6639	–	37179	EMD	F-45	C-C	1971	50
6640	–	37180	EMD	F-45	C-C	1971	50
6641	–	37181	EMD	F-45	C-C	1971	50
6642	–	37182	EMD	F-45	C-C	1971	50
6643	–	37183	EMD	F-45	C-C	1971	50
6644	–	37184	EMD	F-45	C-C	1971	50
6645	–	37185	EMD	F-45	C-C	1971	50

B.N. ENG. NUMBER	PREVIOUS NUMBER	SERIAL NUMBER	BLDR.	MODEL	AAR DESIG'N.	YEAR	PAGE

— INDEX —

B.N. ENG. NUMBER	PREVIOUS NUMBER	SERIAL NUMBER	BLDR.	MODEL	AAR DESIG'N.	YEAR	PAGE

B.N. ENG. NUMBER	PREVIOUS NUMBER	SERIAL NUMBER	BLDR.	MODEL	AAR DESIG'N.	YEAR	PAGE
6700	–	74660-1	EMD	SD40-2	C-C	1974	84
6701	–	74660-2	EMD	SD40-2	C-C	1974	84
6702	–	74660-3	EMD	SD40-2	C-C	1974	84
6703	–	74660-4	EMD	SD40-2	C-C	1974	84
6704	–	74660-5	EMD	SD40-2	C-C	1974	84
6705	–	74660-6	EMD	SD40-2	C-C	1974	84

— INDEX —

B.N. ENG. NUMBER	PREVIOUS NUMBER	SERIAL NUMBER	BLDR.	MODEL	AAR DESIG'N.	YEAR	PAGE
6706	–	74660-7	EMD	SD40-2	C-C	1974	84
6707	–	74660-8	EMD	SD40-2	C-C	1974	84
6708	–	756072-1	EMD	SD40-2	C-C	1976	84
6709	–	756072-2	EMD	SD40-2	C-C	1976	84
6710	–	756072-3	EMD	SD40-2	C-C	1976	84
6711	–	756072-4	EMD	SD40-2	C-C	1976	84
6712	–	756072-5	EMD	SD40-2	C-C	1976	84
6713	–	756072-6	EMD	SD40-2	C-C	1976	84
6714	–	756072-7	EMD	SD40-2	C-C	1976	84
6715	–	756072-8	EMD	SD40-2	C-C	1976	84
6716	–	756072-9	EMD	SD40-2	C-C	1976	84
6717	–	756072-10	EMD	SD40-2	C-C	1976	84
6718	–	756072-11	EMD	SD40-2	C-C	1976	84
6719	–	756072-12	EMD	SD40-2	C-C	1976	84
6720	–	756072-13	EMD	SD40-2	C-C	1976	84
6721	–	756072-14	EMD	SD40-2	C-C	1976	84
6722	–	756072-15	EMD	SD40-2	C-C	1976	84
6723	–	756072-16	EMD	SD40-2	C-C	1976	84
6724	–	756072-17	EMD	SD40-2	C-C	1976	84
6725	–	756072-18	EMD	SD40-2	C-C	1976	84
6726	–	756072-19	EMD	SD40-2	C-C	1976	84
6727	–	756072-20	EMD	SD40-2	C-C	1976	84
6728	–	756072-21	EMD	SD40-2	C-C	1976	84
6729	–	756072-22	EMD	SD40-2	C-C	1976	84
6730	–	756072-23	EMD	SD40-2	C-C	1976	84
6731	–	756072-24	EMD	SD40-2	C-C	1976	84
6732	–	756072-25	EMD	SD40-2	C-C	1976	84
6733	–	756072-26	EMD	SD40-2	C-C	1976	84
6734	–	756072-27	EMD	SD40-2	C-C	1976	84
6735	–	756072-28	EMD	SD40-2	C-C	1976	84
6736	–	756072-29	EMD	SD40-2	C-C	1976	84
6737	–	756072-30	EMD	SD40-2	C-C	1976	84
6738	–	756072-31	EMD	SD40-2	C-C	1976	84
6739	–	756072-32	EMD	SD40-2	C-C	1976	84

– INDEX –

B.N. ENG. NUMBER	PREVIOUS NUMBER	SERIAL NUMBER	BLDR.	MODEL	AAR DESIG'N.	YEAR	PAGE
6740	–	756072-33	EMD	SD40-2	C-C	1976	84
6741	–	756072-34	EMD	SD40-2	C-C	1976	84
6742	–	756072-35	EMD	SD40-2	C-C	1976	84
6743	–	756082-1	EMD	SD40-2	C-C	1976	84
6744	–	756082-2	EMD	SD40-2	C-C	1976	84
6745	–	756082-3	EMD	SD40-2	C-C	1976	84
6746	–	756082-4	EMD	SD40-2	C-C	1976	84
6747	–	756082-5	EMD	SD40-2	C-C	1976	84
6748	–	756083-1	EMD	SD40-2	C-C	1976	84
6749	–	756083-2	EMD	SD40-2	C-C	1976	84
6750	–	756083-3	EMD	SD40-2	C-C	1976	84
6751	–	756083-4	EMD	SD40-2	C-C	1976	84
6752	–	756083-5	EMD	SD40-2	C-C	1976	84
6753	–	766010-1	EMD	SD40-2	C-C	1976	84
6754	–	766010-2	EMD	SD40-2	C-C	1976	84
6755	–	766010-3	EMD	SD40-2	C-C	1976	84
6756	–	766010-4	EMD	SD40-2	C-C	1976	84

B.N. ENG. NUMBER	PREVIOUS NUMBER	SERIAL NUMBER	BLDR.	MODEL	AAR DESIG'N.	YEAR	PAGE
6757	–	766010-5	EMD	SD40-2	C-C	1976	84
6758	–	766010-6	EMD	SD40-2	C-C	1976	84
6759	–	766010-7	EMD	SD40-2	C-C	1976	84
6760	–	766010-8	EMD	SD40-2	C-C	1976	84
6761	–	766010-9	EMD	SD40-2	C-C	1976	84
6762	–	766010-10	EMD	SD40-2	C-C	1976	84
6763	–	766010-11	EMD	SD40-2	C-C	1976	84
6764	–	766010-12	EMD	SD40-2	C-C	1976	84
6765	–	766010-13	EMD	SD40-2	C-C	1976	84
6766	–	766010-14	EMD	SD40-2	C-C	1976	84
6767	–	766010-15	EMD	SD40-2	C-C	1976	84
6768	–	766010-16	EMD	SD40-2	C-C	1976	84
6769	–	766010-17	EMD	SD40-2	C-C	1976	84
6770	–	766010-18	EMD	SD40-2	C-C	1976	84
6771	–	766010-19	EMD	SD40-2	C-C	1976	84
6772	–	766010-20	EMD	SD40-2	C-C	1976	84
6773	–		EMD	SD40-2	C-C	1977	

THIS BOOK IS ASSIGNED TO R. H. SHOBER

BOOK NUMBER 248

— INDEX GUIDE —

B.N. ENGINE NUMBER	B.N. CLASS	INDEX PAGE
1-20	NW-12	1
80-97	SW-1	3
98-99	SW-8	3
100	SW-900	3
101	SW-8	4
102	SW-1	4
106	SW-12	4
108-145	SW-7	4
146-161	SW-9	5
162-166	SW-12	5
167-169	SW-9	5
170-250	SW-12	5
300-324	SW-15	9
375-394	SW-10	12
427-449	SW-10	13
451-573	NW-2	14

B.N. ENGINE NUMBER	B.N. CLASS	INDEX PAGE
574-585	SW-10	18
586-595	NW-2	18
602-761	F-3-7	18
766-853	F-9	23
986-995	NW-5	30
1350-1365	GP-5	40
1400-1436	GP-10	42
1524-1643	GP-7	45
1700-1980	GP-9	51
1990-1998	GP-18	59
2001-2071	GP-20	59
2072-2077	GP-38	62
2078-2109	GP-38-2	62
2200-2254	GP-30	65
2500-2545	GP-35	74
3000-3039	GP-40	89

B.N. ENGINE NUMBER	B.N. CLASS	INDEX PAGE
4010-4011	A-415	119
4054-4085	ARS-3	120
4180-4197	ARS-11	124
4240-4246	A424	126
4252-4264	A425	126
4360-4369	A636	129
5200-5208	U-23C	154
5300-5394	U-30C	157
5400-5429	U-25B	160
5450-5465	U-28B	162
5470-5484	U-30B	162
5500-5544	C30-7	163
5600-5641	U-25C	166
5650-5677	U-28C	168
5700-5765	U-33C	169

B.N. ENGINE NUMBER	B.N. CLASS	INDEX PAGE
5800-5839	U-30C	172
5900-5944	U-30C	175
6000-6059	SD-7	178
6100-6206	SD-9	181
6240-6255	SD-24	185
6300-6324	SD-40	187
6326-6334	SD40-2	188
6376-6385	SD40-2	189
6394-6399	SDP-40	189
6400-6567	SD-45	190
6592-6599	SDP-45	195
6600-6645	F-45	195
6700-6790	SD40-2	198
6800-6836	SD40-2	201
6900-6928	SD40-2	204
8000-8009	SD40-2	237

B.N. ENGINE NUMBER	B.N. CLASS	INDEX PAGE
9900-9925	E-9	292
9967-9976	E-8	294
1776	U-30C	53
1876	SD40-2	56
1976	SDP-40	59

— INDEX GUIDE —

B.N. NUMBER	B.N. CLASS	INDEX PAGE
ELECTRIC TRAILERS		
1-3	ET	309

B.N. NUMBER	B.N. CLASS	INDEX PAGE
HEATER CARS		
8	HC	310
16-19	HC	310

B.N. NUMBER	B.N. CLASS	INDEX PAGE
RADIO CONTROL CARS		
101-112	RCC	311

B.N. NUMBER	B.N. CLASS	INDEX PAGE
AIR CARS		
1-8		312

B.N. NUMBER	B.N. CLASS	INDEX PAGE

COLORADO & SOUTHERN — INDEX GUIDE — FORT WORTH & DENVER

C&S ENGINE NUMBER	C&S CLASS	INDEX PAGE	C&S ENGINE NUMBER	C&S CLASS	INDEX PAGE	ENGINE NUMBER	CLASS	INDEX PAGE	F.W. & D. ENGINE NUMBER	F.W. & D. CLASS	INDEX PAGE	ENGINE NUMBER	CLASS	INDEX PAGE
150-153	NW-2	320	980	SD 40-2	324				605-606	NW-2	325			
154	SW-7	320							607-610	SW-12	325			
156-160	SW-12	320							700-703	GP-7	325			
810-819	SD-7	320							850-859	SD-7	325			
820-842	SD-9	320	996	SD 40-2	324									
868-874	SD-45	321												
875-887	SD-40	321												
890-893	U-30C	322												
900-917	SD 40-2	322												
918-925	SD 40-2	323												
930-961	SD 40-2	323												

— INDEX —

B.N. ENG. NUMBER	PREVIOUS NUMBER	SERIAL NUMBER	BLDR.	MODEL	AAR DESIG'N.	YEAR	PAGE
1	BN 450	861	EMD	NW12	B-B	1939	6
5	BN 454	865	EMD	NW12	B-B	1939	6
14	BN 464	944	EMD	NW12	B-B	1939	6
19	BN 469	949	EMD	NW12	B-B	1939	6

— INDEX —

B.N. ENG. NUMBER	PREVIOUS NUMBER	SERIAL NUMBER	BLDR.	MODEL	AAR DESIG'N.	YEAR	PAGE
80	GN 80	10118	EMD	SW-1	B-B	1950	8
81	GN 81	10119	EMD	SW-1	B-B	1950	8
82	GN 82	10120	EMD	SW-1	B-B	1950	8
83	GN 83	11025	EMD	SW-1	B-B	1950	8

B.N. ENG. NUMBER	PREVIOUS NUMBER	SERIAL NUMBER	BLDR.	MODEL	AAR DESIG'N.	YEAR	PAGE
87	Q 9142	1069	EMD	SW-1	B-B	1940	8
88	Q 9143	1070	EMD	SW-1	B-B	1940	8
89	Q 9144	1071	EMD	SW-1	B-B	1940	8
90	Q 9145	1072	EMD	SW-1	B-B	1940	8
91	Q 9147	1074	EMD	SW-1	B-B	1940	8
92	Q 9148	1280	EMD	SW-1	B-B	1941	8
93	Q 9149	1281	EMD	SW-1	B-B	1941	8
94	Q 9150	1282	EMD	SW-1	B-B	1941	8
95	Q 9151	1283	EMD	SW-1	B-B	1941	8
96	Q 9152	1284	EMD	SW-1	B-B	1941	8
97	Q 9153	1285	EMD	SW-1	B-B	1941	8
98	GN 98	13304	EMD	SW-8	B-B	1951	12
99	GN 99	13305	EMD	SW-8	B-B	1951	12
100	NP 100	732	EMD	SW-900	B-B	1938	14

— INDEX —

B.N. ENG. NUMBER	PREVIOUS NUMBER	SERIAL NUMBER	BLDR.	MODEL	AAR DESIG'N.	YEAR	PAGE
101	GN 101	777	EMD	SW-8	B-B	1937	12
102	FW&D 604	1864	EMD	SW-1	B-B	1942	8
106	GN 100	647	EMD	SW-12	B-B	1937	20
108	NP 108	10933	EMD	SW-7	B-B	1949	10
109	NP 109	10934	EMD	SW-7	B-B	1949	10
110	NP 110	10935	EMD	SW-7	B-B	1949	10
111	NP 111	10936	EMD	SW-7	B-B	1949	10
112	NP 112	10937	EMD	SW-7	B-B	1949	10
113	NP 113	10938	EMD	SW-7	B-B	1949	10
114	NP 114	10939	EMD	SW-7	B-B	1949	10
115	Q 9249	8493	EMD	SW-7	B-B	1950	10
116	Q 9250	8494	EMD	SW-7	B-B	1950	10
117	Q 9251	8495	EMD	SW-7	B-B	1950	10
118	Q 9252	8496	EMD	SW-7	B-B	1950	10
119	Q 9253	8497	EMD	SW-7	B-B	1950	10

B.N. ENG. NUMBER	PREVIOUS NUMBER	SERIAL NUMBER	BLDR.	MODEL	AAR DESIG'N.	YEAR	PAGE
120	Q 9254	8498	EMD	SW-7	B-B	1950	10
121	Q 9255	8499	EMD	SW-7	B-B	1950	10
122	Q 9256	8500	EMD	SW-7	B-B	1950	10
123	Q 9257	8501	EMD	SW-7	B-B	1950	10
124	Q 9258	8502	EMD	SW-7	B-B	1950	10
125	Q 9259	8503	EMD	SW-7	B-B	1950	10
126	Q 9260	8504	EMD	SW-7	B-B	1950	10
127	Q 9261	9718	EMD	SW-7	B-B	1950	10
128	Q 9262	9719	EMD	SW-7	B-B	1950	10
129	Q 9263	9720	EMD	SW-7	B-B	1950	10
130	Q 9264	9721	EMD	SW-7	B-B	1950	10
131	Q 9265	9722	EMD	SW-7	B-B	1950	10
132	Q 9266	9723	EMD	SW-7	B-B	1950	10
133	Q 9267	9724	EMD	SW-7	B-B	1950	10
134	Q 9268	9725	EMD	SW-7	B-B	1950	10
135	GN 163	9569	EMD	SW-7	B-B	1950	10
136	GN 164	9570	EMD	SW-7	B-B	1950	10

– INDEX –

B.N. ENG. NUMBER	PREVIOUS NUMBER	SERIAL NUMBER	BLDR.	MODEL	AAR DESIG'N.	YEAR	PAGE
137	GN 165	9571	EMD	SW-7	B-B	1950	10
138	GN 166	9572	EMD	SW-7	B-B	1950	10
139	GN 167	9573	EMD	SW-7	B-B	1950	10
140	GN 168	9574	EMD	SW-7	B-B	1950	10
141	GN 169	9575	EMD	SW-7	B-B	1950	10
142	GN 170	9576	EMD	SW-7	B-B	1950	10
143	GN 11	10869	EMD	SW-7	B-B	1949	10
144	GN 12	10870	EMD	SW-7	B-B	1949	10
145	GN 13	10871	EMD	SW-7	B-B	1949	10
146	GN 14	A114	EMD	SW-9	B-B	1949	16
147	GN 15	A115	EMD	SW-9	B-B	1949	16
148	GN 16	A116	EMD	SW-9	B-B	1949	16
149	GN 17	13297	EMD	SW-9	B-B	1951	16
150	GN 18	13298	EMD	SW-9	B-B	1951	16
151	GN 19	13299	EMD	SW-9	B-B	1951	16
152	GN 20	13300	EMD	SW-9	B-B	1951	16
153	GN 21	13301	EMD	SW-9	B-B	1951	16
154	GN 22	13302	EMD	SW-9	B-B	1951	16
155	GN 23	13303	EMD	SW-9	B-B	1951	16
156	NP 115	15684	EMD	SW-9	B-B	1952	16
157	NP 116	15685	EMD	SW-9	B-B	1952	16
158	NP 117	15686	EMD	SW-9	B-B	1952	16
159	NP 118	17478	EMD	SW-9	B-B	1953	16
160	Q 9269	13212	EMD	SW-9	B-B	1951	16
161	Q 9270	13213	EMD	SW-9	B-B	1951	16
162	GN 29	22481	EMD	SW-12	B-B	1957	22
163	GN 30	22482	EMD	SW-12	B-B	1957	22
164	GN 31	22483	EMD	SW-12	B-B	1957	22
165	GN 32	22484	EMD	SW-12	B-B	1957	22
166	GN 33	22485	EMD	SW-12	B-B	1957	22
167	SPS 43	14756	EMD	SW-9	B-B	1951	16
168	SPS 44	14757	EMD	SW-9	B-B	1951	16
169	SPS 45	14758	EMD	SW-9	B-B	1951	16
170	NP 170	24034	EMD	SW-12	B-B	1958	22

— INDEX —

B.N. ENG. NUMBER	PREVIOUS NUMBER	SERIAL NUMBER	BLDR.	MODEL	AAR DESIG'N.	YEAR	PAGE
171	NP 171	24035	EMD	SW-12	B-B	1958	22
172	NP 172	24036	EMD	SW-12	B-B	1958	22
173	NP 173	24037	EMD	SW-12	B-B	1958	22
174	NP 174	24038	EMD	SW-12	B-B	1958	22
175	NP 175	24039	EMD	SW-12	B-B	1958	22
176	NP 176	24040	EMD	SW-12	B-B	1958	22
177	NP 177	24041	EMD	SW-12	B-B	1958	22
178	NP 119	20328	EMD	SW-12	B-B	1955	22
179	NP 120	20329	EMD	SW-12	B-B	1955	22
180	NP 121	20330	EMD	SW-12	B-B	1955	22
181	NP 122	20331	EMD	SW-12	B-B	1955	22
182	NP 123	20332	EMD	SW-12	B-B	1955	22
183	NP 124	20333	EMD	SW-12	B-B	1955	22
184	NP 125	20334	EMD	SW-12	B-B	1955	22
185	NP 126	20335	EMD	SW-12	B-B	1955	22
186	NP 127	20320	EMD	SW-12	B-B	1955	22
187	NP 128	20321	EMD	SW-12	B-B	1955	22
188	NP 129	20322	EMD	SW-12	B-B	1955	22
189	NP 130	21019	EMD	SW-12	B-B	1956	22
190	NP 131	21102	EMD	SW-12	B-B	1956	22
191	NP 132	21103	EMD	SW-12	B-B	1956	22
192	NP 133	21100	EMD	SW-12	B-B	1956	22
193	NP 134	21101	EMD	SW-12	B-B	1956	22
194	NP 135	21175	EMD	SW-12	B-B	1956	22
195	NP 136	21276	EMD	SW-12	B-B	1956	22
196	NP 137	21177	EMD	SW-12	B-B	1956	22
197	NP 138	21178	EMD	SW-12	B-B	1956	22
198	NP 139	21179	EMD	SW-12	B-B	1956	22
199	NP 140	21180	EMD	SW-12	B-B	1956	22
200	NP 141	21181	EMD	SW-12	B-B	1956	22
201	NP 142	21433	EMD	SW-12	B-B	1956	22
202	NP 143	21434	EMD	SW-12	B-B	1956	22
203	NP 144	21435	EMD	SW-12	B-B	1956	22
204	NP 145	22089	EMD	SW-12	B-B	1956	22

– INDEX –

B.N. ENG. NUMBER	PREVIOUS NUMBER	SERIAL NUMBER	BLDR.	MODEL	AAR DESIG'N.	YEAR	PAGE
205	NP 146	22748	EMD	SW-12	B-B	1957	22
206	NP 147	22749	EMD	SW-12	B-B	1957	22
207	NP 148	22750	EMD	SW-12	B-B	1957	22
208	NP 149	22751	EMD	SW-12	B-B	1957	22
209	NP 150	22752	EMD	SW-12	B-B	1957	22
210	NP 151	22753	EMD	SW-12	B-B	1957	22
211	NP 152	22754	EMD	SW-12	B-B	1957	22
212	NP 153	22755	EMD	SW-12	B-B	1957	22
213	NP 154	22756	EMD	SW-12	B-B	1957	22
214	NP 155	22757	EMD	SW-12	B-B	1957	22
215	NP 156	22758	EMD	SW-12	B-B	1957	22
216	NP 157	22759	EMD	SW-12	B-B	1957	22
217	NP 158	22760	EMD	SW-12	B-B	1957	22
218	NP 159	22761	EMD	SW-12	B-B	1957	22
219	NP 160	22762	EMD	SW-12	B-B	1957	22
220	NP 161	22763	EMD	SW-12	B-B	1957	22
221	NP 162	22764	EMD	SW-12	B-B	1957	22
222	NP 163	24027	EMD	SW-12	B-B	1957	22
223	NP 164	24028	EMD	SW-12	B-B	1957	22
224	NP 165	24029	EMD	SW-12	B-B	1957	22
225	NP 166	24030	EMD	SW-12	B-B	1957	22
226	NP 167	24031	EMD	SW-12	B-B	1957	22
227	NP 168	24032	EMD	SW-12	B-B	1957	22
228	NP 169	24033	EMD	SW-12	B-B	1958	22
229	Q 9271	20543	EMD	SW-12	B-B	1955	22
230	Q 9272	20544	EMD	SW-12	B-B	1955	22
231	Q 9273	20545	EMD	SW-12	B-B	1955	22
232	Q 9274	20546	EMD	SW-12	B-B	1955	22
233	Q 9275	20547	EMD	SW-12	B-B	1955	22
234	Q 9276	20548	EMD	SW-12	B-B	1955	22
235	Q 9277	20549	EMD	SW-12	B-B	1955	22
236	Q 9278	20550	EMD	SW-12	B-B	1955	22
237	Q 9279	20551	EMD	SW-12	B-B	1955	22
238	Q 9280	20552	EMD	SW-12	B-B	1955	22

– INDEX –

B.N. ENG. NUMBER	PREVIOUS NUMBER	SERIAL NUMBER	BLDR.	MODEL	AAR DESIG'N.	YEAR	PAGE
239	Q 9281	30533	EMD	SW-12	B-B	1965	22
240	Q 9282	30534	EMD	SW-12	B-B	1965	22
241	Q 9283	30535	EMD	SW-12	B-B	1965	22
242	Q 9284	30536	EMD	SW-12	B-B	1965	22
243	Q 9285	30537	EMD	SW-12	B-B	1965	22
244	Q 9286	30538	EMD	SW-12	B-B	1965	22
245	Q 9287	30539	EMD	SW-12	B-B	1965	22
246	Q 9288	30540	EMD	SW-12	B-B	1965	22
247	Q 9289	30541	EMD	SW-12	B-B	1965	22
248	Q 9290	30542	EMD	SW-12	B-B	1965	22
249	Q 9291	30543	EMD	SW-12	B-B	1965	22
250	Q 9292	30544	EMD	SW-12	B-B	1965	22

B.N. ENG. NUMBER	PREVIOUS NUMBER	SERIAL NUMBER	BLDR.	MODEL	AAR DESIG'N.	YEAR	PAGE

– INDEX –

B.N. ENG. NUMBER	PREVIOUS NUMBER	SERIAL NUMBER	BLDR.	MODEL	AAR DESIG'N.	YEAR	PAGE
300	GN 200	33202	EMD	SW-1500	B-B	1967	24
301	GN 201	33203	EMD	SW-1500	B-B	1967	24
302	GN 202	33204	EMD	SW-1500	B-B	1967	24
303	GN 203	33205	EMD	SW-1500	B-B	1967	24
304	GN 204	33206	EMD	SW-1500	B-B	1967	24
305	GN 205	33207	EMD	SW-1500	B-B	1967	24
306	GN 206	33208	EMD	SW-1500	B-B	1967	24

— INDEX —

B.N. ENG. NUMBER	PREVIOUS NUMBER	SERIAL NUMBER	BLDR.	MODEL	AAR DESIG'N.	YEAR	PAGE
307	GN 207	33209	EMD	SW-1500	B-B	1967	24
308	GN 208	33210	EMD	SW-1500	B-B	1967	24
309	GN 209	33211	EMD	SW-1500	B-B	1967	24
310	—	71605-1	EMD	SW-1500	B-B	1973	24
311	—	71605-2	EMD	SW-1500	B-B	1973	24
312	—	71605-3	EMD	SW-1500	B-B	1973	24
313	—	71605-4	EMD	SW-1500	B-B	1973	24
314	—	71605-5	EMD	SW-1500	B-B	1973	24
315	—	71605-6	EMD	SW-1500	B-B	1973	24
316	—	71605-7	EMD	SW-1500	B-B	1973	24
317	—	71605-8	EMD	SW-1500	B-B	1973	24
318	—	71605-9	EMD	SW-1500	B-B	1973	24
319	—	71605-10	EMD	SW-1500	B-B	1973	24
320	—	71605-11	EMD	SW-1500	B-B	1973	24
321	—	71605-12	EMD	SW-1500	B-B	1973	24
322	—	71605-13	EMD	SW-1500	B-B	1973	24
323	—	71605-14	EMD	SW-1500	B-B	1973	24
324	—	71605-15	EMD	SW-1500	B-B	1973	24

— INDEX —

B.N. ENG. NUMBER	PREVIOUS NUMBER	SERIAL NUMBER	BLDR.	MODEL	AAR DESIG'N.	YEAR	PAGE
375	–	4610-1	EMD	SW-10	B-B	1972	18
376	–	4610-2	EMD	SW-10	B-B	1972	18
377	–	4610-3	EMD	SW-10	B-B	1972	18
378	–	4610-4	EMD	SW-10	B-B	1972	18
379	–	4610-5	EMD	SW-10	B-B	1972	18
380	–	4610-6	EMD	SW-10	B-B	1972	18
381	–	4610-7	EMD	SW-10	B-B	1972	18
382	–	4610-8	EMD	SW-10	B-B	1972	18
383	–	4610-9	EMD	SW-10	B-B	1972	18
384	–	4610-10	EMD	SW-10	B-B	1972	18
385	–	4610-11	EMD	SW-10	B-B	1972	18
386	–	4610-12	EMD	SW-10	B-B	1972	18
387	–	4610-13	EMD	SW-10	B-B	1972	18
388	–	4610-14	EMD	SW-10	B-B	1972	18
389	–	4610-15	EMD	SW-10	B-B	1972	18
390	–	4624-1	EMD	SW-10	B-B	1972	18
391	–	4624-2	EMD	SW-10	B-B	1972	18
392	–	4624-3	EMD	SW-10	B-B	1972	18
393	–	4624-4	EMD	SW-10	B-B	1972	18
394	–	4624-5	EMD	SW-10	B-B	1972	18

— INDEX —

B.N. ENG. NUMBER	PREVIOUS NUMBER	SERIAL NUMBER	BLDR.	MODEL	AAR DESIG'N.	YEAR	PAGE

B.N. ENG. NUMBER	PREVIOUS NUMBER	SERIAL NUMBER	BLDR.	MODEL	AAR DESIG'N.	YEAR	PAGE
427	–	36353	EMD	SW-10	B-B	1971	18
428	–	36354	EMD	SW-10	B-B	1971	18
429	–	36355	EMD	SW-10	B-B	1971	18
430	–	36356	EMD	SW-10	B-B	1971	18
431	–	36357	EMD	SW-10	B-B	1971	18
432	–	36358	EMD	SW-10	B-B	1971	18
433	–	36359	EMD	SW-10	B-B	1971	18
434	–	36360	EMD	SW-10	B-B	1971	18
435	–	35882	EMD	SW-10	B-B	1970	18
436	–	35883	EMD	SW-10	B-B	1970	18
437	–	35884	EMD	SW-10	B-B	1970	18
438	–	35885	EMD	SW-10	B-B	1970	18
439	–	35886	EMD	SW-10	B-B	1970	18
440	–	35887	EMD	SW-10	B-B	1970	18
441	–	35888	EMD	SW-10	B-B	1970	18
442	–	35889	EMD	SW-10	B-B	1970	18

— INDEX —

B.N. ENG. NUMBER	PREVIOUS NUMBER	SERIAL NUMBER	BLDR.	MODEL	AAR DESIG'N.	YEAR	PAGE
443	–	35890	EMD	SW-10	B-B	1970	18
444	–	35891	EMD	SW-10	B-B	1970	18
445	–	35892	EMD	SW-10	B-B	1970	18
446	–	35893	EMD	SW-10	B-B	1971	18
447	–	35894	EMD	SW-10	B-B	1971	18
448	–	35895	EMD	SW-10	B-B	1971	18
449	–	35896	EMD	SW-10	B-B	1971	18
451	GN 103	862	EMD	NW2	B-B	1939	2
452	GN 104	863	EMD	NW2	B-B	1939	2
453	GN 105	864	EMD	NW2	B-B	1939	2
455	GN 107	866	EMD	NW2	B-B	1939	2

B.N. ENG. NUMBER	PREVIOUS NUMBER	SERIAL NUMBER	BLDR.	MODEL	AAR DESIG'N.	YEAR	PAGE
456	GN 108	867	EMD	NW2	B-B	1939	2
457	GN 109	868	EMD	NW2	B-B	1939	2
458	GN 110	883	EMD	NW2	B-B	1939	2
459	GN 112	939	EMD	NW2	B-B	1939	2
460	GN 113	940	EMD	NW2	B-B	1939	2
461	GN 114	941	EMD	NW2	B-B	1939	2
462	GN 115	942	EMD	NW2	B-B	1939	2
463	GN 116	943	EMD	NW2	B-B	1939	2
465	GN 118	945	EMD	NW2	B-B	1939	2
466	GN 119	946	EMD	NW2	B-B	1939	2
467	GN 120	947	EMD	NW2	B-B	1939	2
468	GN 121	948	EMD	NW2	B-B	1939	2
470	GN 123	950	EMD	NW2	B-B	1939	2
471	GN 124	1370	EMD	NW2	B-B	1941	2
472	GN 125	1371	EMD	NW2	B-B	1941	2

— INDEX —

B.N. ENG. NUMBER	PREVIOUS NUMBER	SERIAL NUMBER	BLDR.	MODEL	AAR DESIG'N.	YEAR	PAGE
473	GN 126	1372	EMD	NW2	B-B	1941	2
474	GN 127	1373	EMD	NW2	B-B	1941	2
475	GN 128	1374	EMD	NW2	B-B	1941	2
476	GN 129	1375	EMD	NW2	B-B	1941	2
477	GN 130	1376	EMD	NW2	B-B	1941	2
478	GN 131	1377	EMD	NW2	B-B	1941	2
479	GN 134	1711	EMD	NW2	B-B	1942	2
480	GN 135	1712	EMD	NW2	B-B	1942	2
481	GN 136	1713	EMD	NW2	B-B	1942	2
482	GN 145	2475	EMD	NW2	B-B	1942	2
483	GN 146	2476	EMD	NW2	B-B	1942	2
484	GN 147	2477	EMD	NW2	B-B	1942	2
485	GN 148	2478	EMD	NW2	B-B	1942	2
486	GN 149	2479	EMD	NW2	B-B	1942	2
487	GN 150	2480	EMD	NW2	B-B	1942	2
488	GN 151	7786	EMD	NW2	B-B	1949	2
489	GN 152	7787	EMD	NW2	B-B	1949	2
490	GN 153	7788	EMD	NW2	B-B	1949	2
491	GN 154	7789	EMD	NW2	B-B	1949	2
492	GN 155	7790	EMD	NW2	B-B	1949	2
493	GN 156	7791	EMD	NW2	B-B	1949	2
494	GN 157	7792	EMD	NW2	B-B	1949	2
495	GN 158	7793	EMD	NW2	B-B	1949	2
496	GN 159	7794	EMD	NW2	B-B	1949	2
497	GN 160	7795	EMD	NW2	B-B	1949	2
498	GN 161	7796	EMD	NW2	B-B	1949	2
499	GN 162	7797	EMD	NW2	B-B	1949	2
500	Q 9203	999	EMD	NW2	B-B	1940	2
501	Q 9204	1009	EMD	NW2	B-B	1940	2
502	Q 9205	1286	EMD	NW2	B-B	1941	2
503	Q 9206	1287	EMD	NW2	B-B	1941	2
504	Q 9207	1288	EMD	NW2	B-B	1941	2
505	Q 9208	1289	EMD	NW2	B-B	1941	2
506	Q 9209	1290	EMD	NW2	B-B	1941	2

– INDEX –

B.N. ENG. NUMBER	PREVIOUS NUMBER	SERIAL NUMBER	BLDR.	MODEL	AAR DESIG'N.	YEAR	PAGE
507	Q 9210	1291	EMD	NW 2	B-B	1941	2
508	Q 9211	1292	EMD	NW 2	B-B	1941	2
509	Q 9212	1293	EMD	NW 2	B-B	1941	2
510	Q 9213	1294	EMD	NW 2	B-B	1941	2
511	Q 9214	1295	EMD	NW 2	B-B	1941	2
512	Q 9215	1296	EMD	NW 2	B-B	1941	2
513	Q 9216	1297	EMD	NW 2	B-B	1941	2
514	Q 9217	1298	EMD	NW 2	B-B	1941	2
515	Q 9218	1299	EMD	NW 2	B-B	1941	2
516	Q 9219	1300	EMD	NW 2	B-B	1941	2
517	Q 9220	3616	EMD	NW 2	B-B	1946	2
518	Q 9221	3617	EMD	NW 2	B-B	1946	2
519	Q9222	3618	EMD	NW 2	B-B	1946	2
520	Q 9223	3619	EMD	NW 2	B-B	1946	2
521	Q 9224	3620	EMD	NW 2	B-B	1946	2
522	Q 9225	3621	EMD	NW 2	B-B	1946	2
523	Q 9226	3622	EMD	NW 2	B-B	1946	2
524	Q 9227	3623	EMD	NW 2	B-B	1946	2
525	Q 9228	3624	EMD	NW 2	B-B	1946	2
526	Q 9229	3625	EMD	NW 2	B-B	1946	2
527	Q 9230	3626	EMD	NW 2	B-B	1946	2
528	Q 9231	3627	EMD	NW 2	B-B	1946	2
529	Q 9232	3628	EMD	NW 2	B-B	1946	2
530	Q 9233	3629	EMD	NW 2	B-B	1946	2
531	Q 9234	3630	EMD	NW 2	B-B	1946	2
532	Q 9235	3631	EMD	NW 2	B-B	1946	2
533	Q 9236	3632	EMD	NW 2	B-B	1946	2
534	Q 9237	3633	EMD	NW 2	B-B	1946	2
535	Q 9238	3634	EMD	NW 2	B-B	1946	2
536	Q 9239	3635	EMD	NW 2	B-B	1946	2
537	Q 9240	3636	EMD	NW 2	B-B	1946	2
538	Q 9241	3637	EMD	NW 2	B-B	1946	2
539	Q 9242	3638	EMD	NW 2	B-B	1946	2
540	Q 9243	3639	EMD	NW 2	B-B	1946	2

– INDEX –

B.N. ENG. NUMBER	PREVIOUS NUMBER	SERIAL NUMBER	BLDR.	MODEL	AAR DESIG'N.	YEAR	PAGE
541	Q 9244	3640	EMD	NW 2	B-B	1946	2
542	Q 9245	3641	EMD	NW 2	B-B	1946	2
543	Q 9246	3642	EMD	NW 2	B-B	1946	2
544	Q 9247	3643	EMD	NW 2	B-B	1946	2
545	Q 9248	8492	EMD	NW 2	B-B	1949	2
546	Q 9400-A	5514	EMD	NW 2	B-B	1947	2
547	Q 9400-B	5515	EMD	NW 2	B-B	1947	2
548	Q 9401-A	6563	EMD	NW 2	B-B	1949	2
549	Q 9401-B	6568	EMD	NW 2	B-B	1949	2
550	Q 9402-A	6564	EMD	NW 2	B-B	1949	2
551	Q 9402-B	6569	EMD	NW 2	B-B	1949	2
552	Q 9403-A	6565	EMD	NW 2	B-B	1949	2
553	Q 9403-B	6570	EMD	NW 2	B-B	1949	2
554	Q 9404-A	6566	EMD	NW 2	B-B	1949	2
555	Q 9404-B	6571	EMD	NW 2	B-B	1949	2
556	Q 9405-A	6567	EMD	NW 2	B-B	1949	2
557	Q 9405-B	6572	EMD	NW 2	B-B	1949	2
558	Q 9406-A	6573	EMD	NW 2	B-B	1949	2
559	Q 9406-B	6576	EMD	NW 2	B-B	1949	2
560	Q 9407-A	6574	EMD	NW 2	B-B	1949	2
561	Q 9407-B	6577	EMD	NW 2	B-B	1949	2
562	Q 9408-A	6575	EMD	NW 2	B-B	1949	2
563	Q 9408-B	6578	EMD	NW 2	B-B	1949	2
564	Q 9409-A	6579	EMD	NW 2	B-B	1949	2
565	Q 9409-B	6580	EMD	NW 2	B-B	1949	2
566	Q 9410-A	8505	EMD	NW 2	B-B	1949	2
567	Q 9410-B	8509	EMD	NW 2	B-B	1949	2
568	Q 9411-A	8506	EMD	NW 2	B-B	1949	2
569	Q 9411-B	8510	EMD	NW 2	B-B	1949	2
570	Q 9412-A	8507	EMD	NW 2	B-B	1949	2
571	Q 9412-B	8598	EMD	NW 2	B-B	1949	2
572	Q 9413-A	8508	EMD	NW 2	B-B	1949	2
573	Q 9413-B	8599	EMD	NW 2	B-B	1949	2
574	Q 9310	7879-1	EMD	SW-1000	B-B	1966	18

— INDEX —

B.N. ENG. NUMBER	PREVIOUS NUMBER	SERIAL NUMBER	BLDR.	MODEL	AAR DESIG'N.	YEAR	PAGE
575	Q 9311	7879-2	EMD	SW-1000	B-B	1966	18
576	Q 9312	7879-3	EMD	SW-1000	B-B	1966	18
577	Q 9313	7879-4	EMD	SW-1000	B-B	1966	18
578	Q 9314	7879-5	EMD	SW-1000	B-B	1966	18
579	Q 9315	7879-6	EMD	SW-1000	B-B	1966	18
580	Q 9316	7879-7	EMD	SW-1000	B-B	1966	18
581	Q 9317	7879-8	EMD	SW-1000	B-B	1966	18
582	Q 9318	7880-1	EMD	SW-1000	B-B	1966	18
583	Q 9319	7880-2	EMD	SW-1000	B-B	1966	18
584	Q 9320	7880-3	EMD	SW-1000	B-B	1966	18
585	Q 9321	7880-4	EMD	SW-1000	B-B	1966	18
586	NP 99	3168	EMD	NW 2	B-B	1948	2
587	FWD 603	1447	EMD	NW 2	B-B	1941	2
588	NP 102	996	EMD	NW 2	B-B	1940	2
589	NP 103	997	EMD	NW 2	B-B	1940	2
590	NP 104	1310	EMD	NW 2	B-B	1941	2
591	NP 105	1311	EMD	NW 2	B-B	1941	2
592	NP 106	1312	EMD	NW 2	B-B	1941	2
593	SPS 40	5743	EMD	NW 2	B-B	1948	2
594	SPS 41	5744	EMD	NW 2	B-B	1948	2
595	SPS 42	5745	EMD	NW 2	B-B	1948	2
602	GN 271-B	16097	EMD	F-7	B-B	1952	42

— INDEX —

B.N. ENG. NUMBER	PREVIOUS NUMBER	SERIAL NUMBER	BLDR.	MODEL	AAR DESIG'N.	YEAR	PAGE
610	GN 274-B	11066	EMD	F-7	B-B	1950	42

B.N. ENG. NUMBER	PREVIOUS NUMBER	SERIAL NUMBER	BLDR.	MODEL	AAR DESIG'N.	YEAR	PAGE
626	GN 308-C	11082	EMD	F-7	B-B	1950	42

— INDEX —

B.N. ENG. NUMBER	PREVIOUS NUMBER	SERIAL NUMBER	BLDR.	MODEL	AAR DESIG'N.	YEAR	PAGE
644	GN 314-A	16077	EMD	F-7	B-B	1952	42
645	GN 314-B	16088	EMD	F-7	B-B	1952	44
653	GN 316-B	16090	EMD	F-7	B-B	1952	44

B.N. ENG. NUMBER	PREVIOUS NUMBER	SERIAL NUMBER	BLDR.	MODEL	AAR DESIG'N.	YEAR	PAGE
668	GN 454-A	9544	EMD	F-7	B-B	1950	42
675	GN 456-C	9557	EMD	F-7	B-B	1950	44
676	GN 458-A	4821	EMD	F-5	B-B	1948	38

— INDEX —

B.N. ENG. NUMBER	PREVIOUS NUMBER	SERIAL NUMBER	BLDR.	MODEL	AAR DESIG'N.	YEAR	PAGE
682	GN 462-D	17855	EMD	F-7	B-B	1953	42
684	GN 464-A	17852	EMD	F-7	B-B	1953	42

B.N. ENG. NUMBER	PREVIOUS NUMBER	SERIAL NUMBER	BLDR.	MODEL	AAR DESIG'N.	YEAR	PAGE
702	(NP) 6000-D	3780	EMD	F-3	B-B	1947	34
703	BN 9707	4694	EMD	F-3-7	B-B	1947	44
704	BN 9726	11073	EMD	F-3-7	B-B	1950	36
705	BN 9709	17277	EMD	F-7	B-B	1952	44
706	BN 9732	4334	EMD	F-3-7	B-B	1947	36
707	BN 9739	9568	EMD	F-7	B-B	1950	44
708	BN 9740	16092	EMD	F-3-7	B-B	1952	36
710	BN 9750	4600	EMD	F-3	B-B	1947	34

— INDEX —

B.N. ENG. NUMBER	PREVIOUS NUMBER	SERIAL NUMBER	BLDR.	MODEL	AAR DESIG'N.	YEAR	PAGE
712	BN 9752	7798	EMD	F-3	B-B	1948	34
714	BN 9754	17915	EMD	F-7	B-B	1953	42
716	BN 9756	17916	EMD	F-7	B-B	1953	42
717	NP 6009-B	10924	EMD	F-7	B-B	1950	44
718	BN 9758	17917	EMD	F-7	B-B	1953	42
720	NP 6010-A	10914	EMD	F-7	B-B	1950	42
722	BN 9760	17918	EMD	F-7	B-B	1953	42
724	BN 9790	10856	EMD	F-7	B-B	1950	42
725	NP 6011-C	10929	EMD	F-7	B-B	1950	44
726	BN 9794	15682	EMD	F-7	B-B	1952	42

B.N. ENG. NUMBER	PREVIOUS NUMBER	SERIAL NUMBER	BLDR.	MODEL	AAR DESIG'N.	YEAR	PAGE
730	NP 6013-D	14253	EMD	F-7	B-B	1951	42
732	NP 6014-A	14254	EMD	F-7	B-B	1951	42
733	NP 6014-B	14266	EMD	F-7	B-B	1951	44
735	NP 6014-C	14267	EMD	F-7	B-B	1951	44
737	NP 6015-B	14268	EMD	F-7	B-B	1951	44
738	NP 6015-D	14257	EMD	F-7	B-B	1951	42
741	NP 6016-B	14270	EMD	F-7	B-B	1951	44
744	NP 6017-A	14260	EMD	F-7	B-B	1951	42

– INDEX –

B.N. ENG. NUMBER	PREVIOUS NUMBER	SERIAL NUMBER	BLDR.	MODEL	AAR DESIG'N.	YEAR	PAGE
751	NP 6018-C	14275	EMD	F-7	B-B	1951	44
752	NP 6019-A	15672	EMD	F-7	B-B	1951	42
753	NP 6019-B	15676	EMD	F-7	B-B	1951	44
758	NP 6020-D	15675	EMD	F-7	B-B	1951	42
1761	NP 6012-C	10931	EMD	F-7	B-B	1950	44

B.N. ENG. NUMBER	PREVIOUS NUMBER	SERIAL NUMBER	BLDR.	MODEL	AAR DESIG'N.	YEAR	PAGE
766	BN 9800	19056	EMD	F-9	B-B	1954	46
767	BN 9801	19058	EMD	F-9	B-B	1954	48
768	BN 9802	20324	EMD	F-9	B-B	1955	46
769	BN 9803	21126	EMD	F-9	B-B	1956	48
770	BN 9804	21124	EMD	F-9	B-B	1956	46
771	BN 9805	20326	EMD	F-9	B-B	1955	48
772	BN 9806	21125	EMD	F-9	B-B	1956	46
773	BN 9807	20327	EMD	F-9	B-B	1955	48
774	BN 9808	22765	EMD	F-9	B-B	1956	46
775	BN 9809	21117	EMD	F-9	B-B	1956	48
776	BN 9810	20325	EMD	F-9	B-B	1955	46
777	BN 9811	21121	EMD	F-9	B-B	1956	48
778	BN 9812	21105	EMD	F-9	B-B	1956	46

– INDEX –

B.N. ENG. NUMBER	PREVIOUS NUMBER	SERIAL NUMBER	BLDR.	MODEL	AAR DESIG'N.	YEAR	PAGE
779	BN 9813	21122	EMD	F-9	B-B	1956	48
780	BN 9814	8731	EMD	F-9	B-B	1949	46
781	BN 9815	21123	EMD	F-9	B-B	1956	48
782	BN 9816	21111	EMD	F-9	B-B	1956	46
783	BN 9817	21114	EMD	F-9	B-B	1956	48
784	BN 9818	21107	EMD	F-9	B-B	1956	46
785	BN 9819	21115	EMD	F-9	B-B	1956	48
786	BN 9820	21110	EMD	F-9	B-B	1956	46
787	BN 9821	19748	EMD	F-9	B-B	1954	48
788	BN 9822	22766	EMD	F-9	B-B	1956	46
790	BN 9824	20297	EMD	F-9	B-B	1955	46
792	BN 9826	19049	EMD	F-9	B-B	1954	46
794	BN 9828	18129	EMD	F-9	B-B	1953	46

B.N. ENG. NUMBER	PREVIOUS NUMBER	SERIAL NUMBER	BLDR.	MODEL	AAR DESIG'N.	YEAR	PAGE
796	BN 9830	19745	EMD	F-9	B-B	1954	46
800	NP 7000-A	19048	EMD	F-9	B-B	1954	46
801	NP 7000-B	19052	EMD	F-9	B-B	1954	48
803	NP 7000-C	19053	EMD	F-9	B-B	1954	48
804	NP 7001-A	19050	EMD	F-9	B-B	1954	46
805	NP 7001-B	19054	EMD	F-9	B-B	1954	48
806	NP 7001-D	19051	EMD	F-9	B-B	1954	46
807	NP 7001-C	19055	EMD	F-9	B-B	1954	48
808	NP 7002-A	19738	EMD	F-9	B-B	1954	46
809	NP 7002-C	19749	EMD	F-9	B-B	1954	48
810	NP 7002-D	19739	EMD	F-9	B-B	1954	46
812	NP 7003-A	19740	EMD	F-9	B-B	1954	46

– INDEX –

B.N. ENG. NUMBER	PREVIOUS NUMBER	SERIAL NUMBER	BLDR.	MODEL	AAR DESIG'N.	YEAR	PAGE
813	NP 7003-B	19750	EMD	F-9	B-B	1954	48
814	NP 7003-D	19741	EMD	F-9	B-B	1954	46
815	NP 7003-C	19751	EMD	F-9	B-B	1954	48
816	NP 7004-A	19742	EMD	F-9	B-B	1954	46
817	NP 7004-B	19752	EMD	F-9	B-B	1954	48
818	NP 7004-D	19743	EMD	F-9	B-B	1954	46
819	NP 7004-C	19753	EMD	F-9	B-B	1954	48
820	NP 7005-A	19744	EMD	F-9	B-B	1954	46
821	NP 7005-B	19754	EMD	F-9	B-B	1954	48
823	NP 7005-C	19755	EMD	F-9	B-B	1954	48
824	NP 7006-A	19746	EMD	F-9	B-B	1954	46
825	NP 7006-B	19756	EMD	F-9	B-B	1954	48
826	NP 7006-D	19747	EMD	F-9	B-B	1954	46
827	NP 7006-C	19757	EMD	F-9	B-B	1954	48
828	NP 7010-A	21104	EMD	F-9	B-B	1956	46
829	NP 7008-B	20301	EMD	F-9	B-B	1955	48

B.N. ENG. NUMBER	PREVIOUS NUMBER	SERIAL NUMBER	BLDR.	MODEL	AAR DESIG'N.	YEAR	PAGE
830	NP 7008-D	20298	EMD	F-9	B-B	1955	46
831	NP 7008-C	20302	EMD	F-9	B-B	1955	48
832	NP 7009-A	20299	EMD	F-9	B-B	1955	46
833	NP 7009-B	20303	EMD	F-9	B-B	1955	48
834	NP 7009-D	20300	EMD	F-9	B-B	1955	46
835	NP 7009-C	20304	EMD	F-9	B-B	1955	48
836	NP 7011-A	21106	EMD	F-9	B-B	1956	46
837	NP 7011-B	21116	EMD	F-9	B-B	1956	48
838	NP 7012-A	21108	EMD	F-9	B-B	1956	46
839	NP 7012-B	21118	EMD	F-9	B-B	1956	48
840	NP 7012-D	21109	EMD	F-9	B-B	1956	46
842	NP 7014-A	21112	EMD	F-9	B-B	1956	46
843	NP 7013-B	21120	EMD	F-9	B-B	1956	48
844	NP 7014-D	21113	EMD	F-9	B-B	1956	46
845	GN 470-B	19334	EMD	F-9	B-B	1954	48

— INDEX —

B.N. ENG. NUMBER	PREVIOUS NUMBER	SERIAL NUMBER	BLDR.	MODEL	AAR DESIG'N.	YEAR	PAGE
847	GN 472-B	19336	EMD	F-9	B-B	1954	48
849	GN 472-C	19337	EMD	F-9	B-B	1954	48
851	GN 474-B	19338	EMD	F-9	B-B	1954	48
853	GN 474-C	19339	EMD	F-9	B-B	1954	48

B.N. ENG. NUMBER	PREVIOUS NUMBER	SERIAL NUMBER	BLDR.	MODEL	AAR DESIG'N.	YEAR	PAGE

— INDEX —

B.N. ENG. NUMBER	PREVIOUS NUMBER	SERIAL NUMBER	BLDR.	MODEL	AAR DESIG'N.	YEAR	PAGE
986	GN 186	3479	EMD	NW-5	B-B	1946	4
987	GN 187	3480	EMD	NW-5	B-B	1946	4
988	GN 188	3481	EMD	NW-5	B-B	1946	4
989	GN 189	3482	EMD	NW-5	B-B	1946	4
990	GN 190	3483	EMD	NW-5	B-B	1946	4
991	GN 191	3484	EMD	NW-5	B-B	1946	4
992	GN 192	3485	EMD	NW-5	B-B	1946	4
993	GN 193	3486	EMD	NW-5	B-B	1946	4
994	GN 194	3487	EMD	NW-5	B-B	1946	4
995	GN 195	3488	EMD	NW-5	B-B	1946	4

B.N. ENG. NUMBER	PREVIOUS NUMBER	SERIAL NUMBER	BLDR.	MODEL	AAR DESIG'N.	YEAR	PAGE

— INDEX —

B.N. ENG. NUMBER	PREVIOUS NUMBER	SERIAL NUMBER	BLDR.	MODEL	AAR DESIG'N.	YEAR	PAGE

B.N. ENG. NUMBER	PREVIOUS NUMBER	SERIAL NUMBER	BLDR.	MODEL	AAR DESIG'N.	YEAR	PAGE
1350	GN 900	24081	EMD	GP-5	B-B	1958	52
1351	GN 901	24082	EMD	GP-5	B-B	1958	52
1352	GN 902	24083	EMD	GP-5	B-B	1958	52
1353	GN 903	24084	EMD	GP-5	B-B	1958	52
1354	GN 904	25062	EMD	GP-5	B-B	1959	52
1355	GN 905	25063	EMD	GP-5	B-B	1959	52
1356	GN 906	25064	EMD	GP-5	B-B	1959	52

— INDEX —

B.N. ENG. NUMBER	PREVIOUS NUMBER	SERIAL NUMBER	BLDR.	MODEL	AAR DESIG'N.	YEAR	PAGE
1357	GN 907	25065	EMD	GP-5	B-B	1959	52
1358	GN 908	25066	EMD	GP-5	B-B	1959	52
1359	GN 909	25068	EMD	GP-5	B-B	1959	52
1360	GN 910	25069	EMD	GP-5	B-B	1959	52
1361	GN 911	25070	EMD	GP-5	B-B	1959	52
1362	GN 912	25060	EMD	GP-5	B-B	1959	52
1363	GN 913	25061	EMD	GP-5	B-B	1959	52
1364	GN 914	25067	EMD	GP-5	B-B	1959	52
1365	GN 915	25071	EMD	GP-5	B-B	1959	52

B.N. ENG. NUMBER	PREVIOUS NUMBER	SERIAL NUMBER	BLDR.	MODEL	AAR DESIG'N.	YEAR	PAGE

— INDEX —

B.N. ENG. NUMBER	PREVIOUS NUMBER	SERIAL NUMBER	BLDR.	MODEL	AAR DESIG'N.	YEAR	PAGE
1400	BN 1521	11047	EMD	GP-10	B-B	1950	58
1401	BN 1523	13336	EMD	GP-10	B-B	1951	58
1402	BN 1527	13340	EMD	GP-10	B-B	1951	58
1403	BN 1546	13359	EMD	GP-10	B-B	1951	58
1404	BN 1504	11053	EMD	GP-10	B-B	1950	58
1405	BN 1505	11054	EMD	GP-10	B-B	1950	58
1406	BN 1506	11032	EMD	GP-10	B-B	1950	58
1407	BN 1507	11033	EMD	GP-10	B-B	1950	58

B.N. ENG. NUMBER	PREVIOUS NUMBER	SERIAL NUMBER	BLDR.	MODEL	AAR DESIG'N.	YEAR	PAGE
1408	BN 1508	11034	EMD	GP-10	B-B	1950	58
1409	BN 1509	11035	EMD	GP-10	B-B	1950	58
1410	BN 1539	13352	EMD	GP-10	B-B	1951	58
1411	BN 1511	11037	EMD	GP-10	B-B	1950	58
1412	BN 1512	11038	EMD	GP-10	B-B	1950	58
1413	BN 1513	11039	EMD	GP-10	B-B	1950	58
1414	BN 1514	11040	EMD	GP-10	B-B	1950	58
1415	BN 1515	11041	EMD	GP-10	B-B	1950	58
1416	BN 1516	11042	EMD	GP-10	B-B	1950	58
1417	BN 1517	11043	EMD	GP-10	B-B	1950	58
1418	BN 1518	11044	EMD	GP-10	B-B	1950	58
1419	BN 1519	11045	EMD	GP-10	B-B	1950	58
1420	BN 1520	11046	EMD	GP-10	B-B	1950	58
1421	BN 1624	10940	EMD	GP-10	B-B	1950	58
1422	BN 1528	13341	EMD	GP-10	B-B	1951	58

– INDEX –

B.N. ENG. NUMBER	PREVIOUS NUMBER	SERIAL NUMBER	BLDR.	MODEL	AAR DESIG'N.	YEAR	PAGE
1426	BN 1625	10941	EMD	GP-10	B-B	1950	58
1436	BN 1583	14691	EMD	GP-10	B-B	1951	58
1438	BN 1510	11036	EMD	GP-10	B-B	1950	58

B.N. ENG. NUMBER	PREVIOUS NUMBER	SERIAL NUMBER	BLDR.	MODEL	AAR DESIG'N.	YEAR	PAGE

— INDEX —

B.N. ENG. NUMBER	PREVIOUS NUMBER	SERIAL NUMBER	BLDR.	MODEL	AAR DESIG'N.	YEAR	PAGE

B.N. ENG. NUMBER	PREVIOUS NUMBER	SERIAL NUMBER	BLDR.	MODEL	AAR DESIG'N.	YEAR	PAGE
1524	GN 624	13337	EMD	GP-7	B-B	1951	54
1525	GN 625	13338	EMD	GP-7	B-B	1951	54
1526	GN 626	13339	EMD	GP-7	B-B	1951	54
1530	GN 630	13343	EMD	GP-7	B-B	1951	54
1531	GN 631	13344	EMD	GP-7	B-B	1951	54
1532	GN 632	13345	EMD	GP-7	B-B	1951	54
1533	GN 633	13346	EMD	GP-7	B-B	1951	54

— INDEX —

B.N. ENG. NUMBER	PREVIOUS NUMBER	SERIAL NUMBER	BLDR.	MODEL	AAR DESIG'N.	YEAR	PAGE
1534	GN 634	13347	EMD	GP-7	B-B	1951	54
1535	GN 635	13348	EMD	GP-7	B-B	1951	54
1536	GN 636	13349	EMD	GP-7	B-B	1951	54
1537	GN 637	13350	EMD	GP-7	B-B	1951	54
1538	GN 638	13351	EMD	GP-7	B-B	1951	54
1540	GN 640	13353	EMD	GP-7	B-B	1951	54
1541	GN 641	13354	EMD	GP-7	B-B	1951	54
1542	GN 642	13355	EMD	GP-7	B-B	1951	54
1543	GN 643	13356	EMD	GP-7	B-B	1951	54
1544	GN 644	13357	EMD	GP-7	B-B	1951	54
1545	GN 645	13358	EMD	GP-7	B-B	1951	54
1547	GN 647	13360	EMD	GP-7	B-B	1951	54
1548	GN 648	13361	EMD	GP-7	B-B	1951	54
1549	GN 649	13362	EMD	GP-7	B-B	1951	54
1550	GN 650	13363	EMD	GP-7	B-B	1951	54

B.N. ENG. NUMBER	PREVIOUS NUMBER	SERIAL NUMBER	BLDR.	MODEL	AAR DESIG'N.	YEAR	PAGE
1551	GN 651	13364	EMD	GP-7	B-B	1951	54
1552	GN 652	13365	EMD	GP-7	B-B	1951	54
1553	GN 653	17867	EMD	GP-7	B-B	1953	54
1554	GN 654	17868	EMD	GP-7	B-B	1953	54
1555	GN 655	17869	EMD	GP-7	B-B	1953	54
1556	Q 200	13169	EMD	GP-7	B-B	1951	54
1557	Q 201	13170	EMD	GP-7	B-B	1951	54
1558	Q 202	13171	EMD	GP-7	B-B	1951	54
1559	Q 203	13172	EMD	GP-7	B-B	1951	54
1560	Q 204	13173	EMD	GP-7	B-B	1951	54
1561	Q 205	13174	EMD	GP-7	B-B	1951	54
1562	Q 206	13175	EMD	GP-7	B-B	1951	54
1563	Q 207	13176	EMD	GP-7	B-B	1951	54
1564	Q 208	13177	EMD	GP-7	B-B	1951	54
1565	Q 209	13178	EMD	GP-7	B-B	1951	54
1566	Q 210	13179	EMD	GP-7	B-B	1951	54
1567	Q 211	13180	EMD	GP-7	B-B	1951	54

— INDEX —

B.N. ENG. NUMBER	PREVIOUS NUMBER	SERIAL NUMBER	BLDR.	MODEL	AAR DESIG'N.	YEAR	PAGE
1568	Q 212	13181	EMD	GP-7	B-B	1951	54
1569	Q 213	13182	EMD	GP-7	B-B	1951	54
1570	Q 214	13183	EMD	GP-7	B-B	1951	54
1571	Q 215	14679	EMD	GP-7	B-B	1951	54
1572	Q 216	14680	EMD	GP-7	B-B	1951	54
1573	Q 217	14681	EMD	GP-7	B-B	1951	54
1574	Q 218	14682	EMD	GP-7	B-B	1951	54
1575	Q 219	14683	EMD	GP-7	B-B	1951	54
1576	Q 220	14684	EMD	GP-7	B-B	1951	54
1578	GN 222	14686	EMD	GP-7	B-B	1951	54
1579	GN 223	14687	EMD	GP-7	B-B	1951	54
1580	GN 224	14688	EMD	GP-7	B-B	1951	54
1581	GN 225	14689	EMD	GP-7	B-B	1951	54
1582	GN 226	14690	EMD	GP-7	B-B	1951	54
1584	GN 228	14692	EMD	GP-7	B-B	1951	54

B.N. ENG. NUMBER	PREVIOUS NUMBER	SERIAL NUMBER	BLDR.	MODEL	AAR DESIG'N.	YEAR	PAGE
1585	Q 229	14693	EMD	GP-7	B-B	1951	54
1586	Q 230	14694	EMD	GP-7	B-B	1951	54
1587	Q 231	14695	EMD	GP-7	B-B	1951	54
1588	Q 232	14696	EMD	GP-7	B-B	1951	54
1589	Q 233	14697	EMD	GP-7	B-B	1951	54
1590	Q 234	14698	EMD	GP-7	B-B	1951	54
1591	Q 235	14699	EMD	GP-7	8-8	1951	54
1592	Q 236	14700	EMD	GP-7	B-B	1951	54
1593	Q 237	14701	EMD	GP-7	B-B	1951	54
1594	Q 238	14702	EMD	GP-7	B-B	1951	54
1595	Q 239	14703	EMD	GP-7	8-B	1951	54
1596	Q 240	14704	EMD	GP-7	B-B	1952	54
1597	Q 241	14705	EMD	GP-7	B-B	1952	54
1598	Q 242	14706	EMD	GP-7	B-B	1952	54
1599	Q 243	14707	EMD	GP-7	B-B	1952	54
1600	Q 244	14708	EMD	GP-7	B-B	1952	54
1601	Q 245	14709	EMD	GP-7	B-B	1952	54

— INDEX —

B.N. ENG. NUMBER	PREVIOUS NUMBER	SERIAL NUMBER	BLDR.	MODEL	AAR DESIG'N.	YEAR	PAGE
1602	Q 246	14710	EMD	GP-7	B-B	1952	54
1603	Q 247	14711	EMD	GP-7	B-B	1952	54
1604	Q 248	14712	EMD	GP-7	B-B	1952	54
1605	Q 249	14713	EMD	GP-7	B-B	1952	54
1606	Q 250	16711	EMD	GP-7	B-B	1952	54
1607	Q 251	16712	EMD	GP-7	B-B	1952	54
1608	Q 252	16713	EMD	GP-7	B-B	1952	54
1610	Q 254	18970	EMD	GP-7	B-B	1953	54
1611	Q 255	18971	EMD	GP-7	B-B	1953	54
1612	Q 256	18972	EMD	GP-7	B-B	1953	54
1613	Q 257	18973	EMD	GP-7	B-B	1953	54
1614	Q 258	18974	EMD	GP-7	B-B	1953	54
1615	Q 259	18975	EMD	GP-7	B-B	1953	54
1616	Q 260	18976	EMD	GP-7	B-B	1953	54
1617	Q 261	18977	EMD	GP-7	B-B	1953	54
1618	Q 262	18978	EMD	GP-7	B-B	1953	54

B.N. ENG. NUMBER	PREVIOUS NUMBER	SERIAL NUMBER	BLDR.	MODEL	AAR DESIG'N.	YEAR	PAGE
1619	Q 263	18979	EMD	GP-7	B-B	1953	54
1620	Q 264	18980	EMD	GP-7	B-B	1953	54
1621	Q 265	18981	EMD	GP-7	B-B	1953	54
1622	Q 266	18982	EMD	GP-7	B-B	1953	54
1623	Q 267	18983	EMD	GP-7	B-B	1953	54
1626	NP 552	14093	EMD	GP-7	B-B	1951	54
1627	NP 553	14094	EMD	GP-7	B-B	1951	54
1628	NP 554	14111	EMD	GP-7	B-B	1951	54
1629	NP 555	15687	EMD	GP-7	B-B	1952	54
1630	NP 556	15688	EMD	GP-7	B-B	1952	54
1631	NP 557	15689	EMD	GP-7	B-B	1952	54
1632	NP 558	15690	EMD	GP-7	B-B	1952	54
1633	NP 559	17479	EMD	GP-7	B-B	1952	54
1634	NP 560	19031	EMD	GP-7	B-B	1953	54
1635	NP 561	19032	EMD	GP-7	B-B	1953	54

— INDEX —

B.N. ENG. NUMBER	PREVIOUS NUMBER	SERIAL NUMBER	BLDR.	MODEL	AAR DESIG'N.	YEAR	PAGE
1636	NP 562	19033	EMD	GP-7	B-B	1953	54
1637	NP 563	19034	EMD	GP-7	B-B	1953	54
1638	NP 564	19035	EMD	GP-7	B-B	1953	54
1639	NP 565	19036	EMD	GP-7	B-B	1953	54
1640	NP 566	19037	EMD	GP-7	B-B	1953	54
1641	NP 567	19038	EMD	GP-7	B-B	1953	54
1642	NP 568	19039	EMD	GP-7	B-B	1953	54
1643	NP 569	19040	EMD	GP-7	B-B	1953	54

B.N. ENG. NUMBER	PREVIOUS NUMBER	SERIAL NUMBER	BLDR.	MODEL	AAR DESIG'N.	YEAR	PAGE

— INDEX —

B.N. ENG. NUMBER	PREVIOUS NUMBER	SERIAL NUMBER	BLDR.	MODEL	AAR DESIG'N.	YEAR	PAGE
6774	–		EMD	SD40-2	C-C	1977	
6775	–		EMD	SD40-2	C-C	1977	
6776	–		EMD	SD40-2	C-C	1977	
6777	–		EMD	SD40-2	C-C	1977	
6778	–		EMD	SD40-2	C-C	1977	
6779	–		EMD	SD40-2	C-C	1977	
6780	–		EMD	SD40-2	C-C	1977	
6781	–		EMD	SD40-2	C-C	1977	
6782	–		EMD	SD40-2	C-C	1977	
6783	–		EMD	SD40-2	C-C	1977	
6784	–		EMD	SD40-2	C-C	1977	
6785	–		EMD	SD40-2	C-C	1977	
6786	–		EMD	SD40-2	C-C	1977	
6787	–		EMD	SD40-2	C-C	1977	
6788	–		EMD	SD40-2	C-C	1977	
6789	–		EMD	SD40-2	C-C	1977	
6790	–		EMD	SD40-2	C-C	1977	

B.N. ENG. NUMBER	PREVIOUS NUMBER	SERIAL NUMBER	BLDR.	MODEL	AAR DESIG'N.	YEAR	PAGE
6800	BN 6340	72639-1	EMD	SD40-2	C-C	1973	84
6801	BN 6341	72639-2	EMD	SD40-2	C-C	1973	84
6802	BN 6342	72639-3	EMD	SD40-2	C-C	1973	84
6803	BN 6343	72639-4	EMD	SD40-2	C-C	1973	84
6804	BN 6344	72639-5	EMD	SD40-2	C-C	1973	84
6805	BN 6345	72639-6	EMD	SD40-2	C-C	1973	84
6806	BN 6346	72639-7	EMD	SD40-2	C-C	1973	84
6807	BN 6347	72639-8	EMD	SD40-2	C-C	1973	84

— INDEX —

B.N. ENG. NUMBER	PREVIOUS NUMBER	SERIAL NUMBER	BLDR.	MODEL	AAR DESIG'N.	YEAR	PAGE
6808	BN 6348	72639-9	EMD	SD40-2	C-C	1973	84
6809	BN 6349	72639-10	EMD	SD40-2	C-C	1973	84
6810	BN 6350	72639-11	EMD	SD40-2	C-C	1973	84
6811	BN 6351	72639-12	EMD	SD40-2	C-C	1973	84
6812	BN 6352	72639-13	EMD	SD40-2	C-C	1973	84
6813	BN 6353	72639-14	EMD	SD40-2	C-C	1973	84
6814	BN 6354	72639-15	EMD	SD40-2	C-C	1973	84
6815	BN 6355	72639-16	EMD	SD40-2	C-C	1973	84
6816	BN 6356	72639-17	EMD	SD40-2	C-C	1973	84
6817	BN 6357	72639-18	EMD	SD40-2	C-C	1973	84
6818	BN 6358	72639-19	EMD	SD40-2	C-C	1973	84
6819	BN 6359	72639-20	EMD	SD40-2	C-C	1973	84
6820	BN 6360	72639-21	EMD	SD40-2	C-C	1973	84
6821	BN 6361	72639-22	EMD	SD40-2	C-C	1973	84
6822	BN 6362	72639-23	EMD	SD40-2	C-C	1973	84
6823	BN 6363	72639-24	EMD	SD40-2	C-C	1973	84
6824	—	73601-1	EMD	SD40-2	C-C	1973	84

B.N. ENG. NUMBER	PREVIOUS NUMBER	SERIAL NUMBER	BLDR.	MODEL	AAR DESIG'N.	YEAR	PAGE
6825	—	73601-2	EMD	SD40-2	C-C	1973	84
6826	—	73601-3	EMD	SD40-2	C-C	1973	84
6827	—	73601-4	EMD	SD40-2	C-C	1973	84
6828	—	73601-5	EMD	SD40-2	C-C	1973	84
6829	—	73601-6	EMD	SD40-2	C-C	1973	84
6830	—	73601-7	EMD	SD40-2	C-C	1973	84
6831	—	73601-8	EMD	SD40-2	C-C	1973	84
6832	—	73601-9	EMD	SD40-2	C-C	1973	84
6833	—	73601-10	EMD	SD40-2	C-C	1973	84
6834	—	73601-11	EMD	SD40-2	C-C	1973	84
6835	—	73601-12	EMD	SD40-2	C-C	1973	84
6836	—	73601-13	EMD	SD40-2	C-C	1973	84

— INDEX —

B.N. ENG. NUMBER	PREVIOUS NUMBER	SERIAL NUMBER	BLDR.	MODEL	AAR DESIG'N.	YEAR	PAGE

B.N. ENG. NUMBER	PREVIOUS NUMBER	SERIAL NUMBER	BLDR.	MODEL	AAR DESIG'N.	YEAR	PAGE
6900	BN 6364	72682-1	EMD	SD40-2	C-C	1973	84
6901	BN 6365	72682-2	EMD	SD40-2	C-C	1973	84
6902	BN 6366	72682-3	EMD	SD40-2	C-C	1973	84
6903	BN 6367	72682-4	EMD	SD40-2	C-C	1973	84
6904	BN 6368	72682-5	EMD	SD40-2	C-C	1973	84
6905	BN 6369	72682-6	EMD	SD40-2	C-C	1973	84
6906	BN 6370	72682-7	EMD	SD40-2	C-C	1973	84
6907	BN 6371	72682-8	EMD	SD40-2	C-C	1973	84
6908	BN 6372	72682-9	EMD	SD40-2	C-C	1973	84
6909	BN 6373	72682-10	EMD	SD40-2	C-C	1973	84

— INDEX —

B.N. ENG. NUMBER	PREVIOUS NUMBER	SERIAL NUMBER	BLDR.	MODEL	AAR DESIG'N.	YEAR	PAGE
6910	BN 6374	72682-11	EMD	SD40-2	C-C	1973	84
6911	BN 6375	72682-12	EMD	SD40-2	C-C	1973	84
6912	BN 6335	5803-11	EMD	SD40-2	C-C	1972	84
6913	BN 6336	5803-12	EMD	SD40-2	C-C	1972	84
6914	BN 6337	5803-13	EMD	SD40-2	C-C	1972	84
6915	BN 6338	5803-14	EMD	SD40-2	C-C	1972	84
6916	BN 6339	5803-15	EMD	SD40-2	C-C	1972	84
6917	–	73615-1	EMD	SD40-2	C-C	1973	84
6918	–	73615-2	EMD	SD40-2	C-C	1973	84
6919	–	73615-3	EMD	SD40-2	C-C	1973	84
6920	–	73615-4	EMD	SD40-2	C-C	1973	84
6921	–	73615-5	EMD	SD40-2	C-C	1973	84
6922	–	73615-6	EMD	SD40-2	C-C	1973	84
6923	–	73615-7	EMD	SD40-2	C-C	1973	84
6924	–	73615-8	EMD	SD40-2	C-C	1973	84
6925	–	73615-9	EMD	SD40-2	C-C	1973	84
6926	–	73615-10	EMD	SD40-2	C-C	1973	84
6927	–	73615-11	EMD	SD40-2	C-C	1973	84
6928	–	73615-12	EMD	SD40-2	C-C	1973	84

– INDEX –

B.N. ENG. NUMBER	PREVIOUS NUMBER	SERIAL NUMBER	BLDR.	MODEL	AAR DESIG'N.	YEAR	PAGE
8000	–		EMD	SD40-2	C-C	1977	
8001	–		EMD	SD40-2	C-C	1977	
8002	–		EMD	SD40-2	C-C	1977	
8003	–		EMD	SD40-2	C-C	1977	
8004	–		EMD	SD40-2	C-C	1977	
8005	–		EMD	SD40-2	C-C	1977	
8006	–		EMD	SD40-2	C-C	1977	
8007	–		EMD	SD40-2	C-C	1977	
8008	–		EMD	SD40-2	C-C	1977	
8009	–		EMD	SD40-2	C-C	1977	

B.N. ENG. NUMBER	PREVIOUS NUMBER	SERIAL NUMBER	BLDR.	MODEL	AAR DESIG'N.	YEAR	PAGE

— INDEX —

B.N. ENG. NUMBER	PREVIOUS NUMBER	SERIAL NUMBER	BLDR.	MODEL	AAR DESIG'N.	YEAR	PAGE
9900	BN 9935	9684	EMD	E-9	AIA-AIA	1950	32
9901	BN 9938	9675	EMD	E-9	AIA-AIA	1949	32

B.N. ENG. NUMBER	PREVIOUS NUMBER	SERIAL NUMBER	BLDR.	MODEL	AAR DESIG'N.	YEAR	PAGE
9902	BN 9939	9677	EMD	E-9	AIA-AIA	1950	32
9903	BN 9940	9679	EMD	E-9	AIA-AIA	1950	32
9904	BN 9977	18319	EMD	E-9	AIA-AIA	1953	32
9910	BN 9980	20534	EMD	E-9	AIA-AIA	1955	32
9911	BN 9981	20536	EMD	E-9	AIA-AIA	1955	32
9912	BN 9982	20538	EMD	E-9	AIR-AIA	1956	32
9913	BN 9983	20540	EMD	E-9	AIA-AIA	1956	32
9914	BN 9984	20542	EMD	E-9	AIA-AIA	1956	32
9915	BN 9985	20533	EMD	E-9	AIA-AIA	1955	32
9916	BN 9986	20535	EMD	E-9	AIA-AIA	1955	32
9917	BN 9987	20537	EMD	E-9	AIA-AIA	1955	32
9918	BN 9988	20539	EMD	E-9	AIA-AIA	1956	32

— INDEX —

B.N. ENG. NUMBER	PREVIOUS NUMBER	SERIAL NUMBER	BLDR.	MODEL	AAR DESIG'N.	YEAR	PAGE
9919	BN 9989	20541	EMD	E-9	AIA-AIA	1956	32
9920	BN 9990	19629	EMD	E-9	AIA-AIA	1954	32
9921	BN 9991	19630	EMD	E-9	AIA-AIA	1954	32
9922	BN 9992	19631	EMD	E-9	AIA-AIA	1954	32
9923	BN 9993	19632	EMD	E-9	AIA-AIA	1954	32
9924	BN 9994	19633	EMD	E-9	AIA-AIA	1954	32
9925	BN 9995	19634	EMD	E-9	AIA-AIA	1954	32

B.N. ENG. NUMBER	PREVIOUS NUMBER	SERIAL NUMBER	BLDR.	MODEL	AAR DESIG'N.	YEAR	PAGE

– INDEX –

B.N. ENG. NUMBER	PREVIOUS NUMBER	SERIAL NUMBER	BLDR.	MODEL	AAR DESIG'N.	YEAR	PAGE
9967	Q 9967	16708	EMD	E-8	AIA-AIA	1952	30
9972	Q 9972	18314	EMD	E-8	AIA-AIA	1953	30
9973	Q 9973	18315	EMD	E-8	AIA-AIA	1953	30
9976	Q 9976	18318	EMD	E-8	AIA-AIA	1953	30

ELECTRIC TRAILER — INDEX — ELECTRIC TRAILER

B.N. ENG. NUMBER	PREVIOUS NUMBER	SERIAL NUMBER	BLDR.	MODEL	AAR DESIG'N.	YEAR	PAGE
ET-1	NP ET-1	–	NP	ET	B-B	1959	113
ET-2	NP ET-2	–	NP	ET	B-B	1960	113
ET-3	NP ET-3	–	NP	ET	B-B	1965	114

B.N. ENG. NUMBER	PREVIOUS NUMBER	SERIAL NUMBER	BLDR.	MODEL	AAR DESIG'N.	YEAR	PAGE

HEATER CARS — INDEX — HEATER CARS

B.N. ENG. NUMBER	PREVIOUS NUMBER	SERIAL NUMBER	BLDR.	MODEL	AAR DESIG'N.	YEAR	PAGE
8	GN 8	–	GN	–	–	1950	115
16	GN 16	–	GN	–	–	1967	116
17	GN 17	–	GN	–	–	1967	116
18	GN 18	–	GN	–	–	1967	116
19	GN 19	–	GN	–	–	1967	116

RADIO CONTROL CARS — INDEX — RADIO CONTROL CARS

B.N. ENG. NUMBER	PREVIOUS NUMBER	SERIAL NUMBER	BLDR.	MODEL	AAR DESIG'N.	YEAR	PAGE
101	NP 6010-C	–	NP	RCC	–	1969	117
102	BN 749	–	BN	RCC	–	1972	119
103	GN 438-C	–	GN	RCC	–	1968	118
104	GN 446-B	–	GN	RCC	–	1968	118
105	BN 763	–	BN	RCC	–	1971	119
106	BN 621	–	BN	RCC	–	1971	119
107	BN 641	–	BN	RCC	–	1972	119
108	BN 661	–	BN	RCC	–	1972	119
109	BN 701	–	BN	RCC	–	1972	119
110	BN 629	–	BN	RCC	–	1972	119
111	BN 713	–	BN	RCC	–	1972	119
112	BN 671	–	BN	RCC	–	1972	119

B.N. ENG. NUMBER	PREVIOUS NUMBER	SERIAL NUMBER	BLDR.	MODEL	AAR DESIG'N.	YEAR	PAGE

AIR CARS — INDEX — AIR CARS

B.N. ENG. NUMBER	PREVIOUS NUMBER	SERIAL NUMBER	BLDR.	MODEL	AAR DESIG'N.	YEAR	PAGE
1	GN 1	–	GN	–	–	1964	120
2	GN 2	–	GN	–	–	1970	121
3	GN 3	–	GN	–	–	1969	121
4	GN 4	–	GN	–	–	1971	122
5	GN 5	–	GN	–	–	1970	122
6	GN 6	–	GN	–	–	1970	122
7	GN 7	–	GN	–	–	1970	122
8	GN 8	–	GN	–	–	1971	122

B.N. ENG. NUMBER	PREVIOUS NUMBER	SERIAL NUMBER	BLDR.	MODEL	AAR DESIG'N.	YEAR	PAGE

COLORADO & SOUTHERN — INDEX — COLORADO & SOUTHERN

C&S ENG. NUMBER	PREVIOUS NUMBER	SERIAL NUMBER	BLDR.	MODEL	AAR DESIG'N.	YEAR	PAGE
150	–	4945	EMD	NW-2	B-B	1947	2
151	–	4946	EMD	NW-2	B-B	1947	2
152	–	4947	EMD	NW-2	B-B	1947	2
153	–	7740	EMD	NW-2	B-B	1948	2
154	–	11475	EMD	SW-7	B-B	1950	10
156	–	25006	EMD	SW-12	B-B	1959	22
157	–	25007	EMD	SW-12	B-B	1959	22
158	–	25008	EMD	SW-12	B-B	1959	22
159	–	25009	EMD	SW-12	B-B	1959	22
160	–	25010	EMD	SW-12	B-B	1959	22

C&S ENG. NUMBER	PREVIOUS NUMBER	SERIAL NUMBER	BLDR.	MODEL	AAR DESIG'N.	YEAR	PAGE
810	–	17129	EMD	SD-7	C-C	1953	74
811	–	17130	EMD	SD-7	C-C	1953	74
812	–	17131	EMD	SD-7	C-C	1953	74
813	–	17132	EMD	SD-7	C-C	1953	74
814	–	17133	EMD	SD-7	C-C	1953	74
815	–	17134	EMD	SD-7	C-C	1953	74
816	–	17135	EMD	SD-7	C-C	1953	74
817	–	17136	EMD	SD-7	C-C	1953	74
818	–	17260	EMD	SD-7	C-C	1953	74
819	–	17261	EMD	SD-7	C-C	1953	74
820	–	22403	EMD	SD-9	C-C	1956	76
821	–	22404	EMD	SD-9	C-C	1956	76
822	–	22405	EMD	SD-9	C-C	1956	76
823	–	22406	EMD	SD-9	C-C	1956	76
824	–	22407	EMD	SD-9	C-C	1956	76
825	–	22408	EMD	SD-9	C-C	1957	76
826	–	22409	EMD	SD-9	C-C	1956	76

COLORADO & SOUTHERN — INDEX — COLORADO & SOUTHERN

C&S ENG. NUMBER	PREVIOUS NUMBER	SERIAL NUMBER	BLDR.	MODEL	AAR DESIG'N.	YEAR	PAGE
827	–	22410	EMD	SD-9	C-C	1957	76
828	–	22411	EMD	SD-9	C-C	1957	76
829	–	22412	EMD	SD-9	C-C	1957	76
830	–	22413	EMD	SD-9	C-C	1957	76
831	–	25011	EMD	SD-9	C-C	1959	76
832	–	25012	EMD	SD-9	C-C	1959	76
833	–	25013	EMD	SD-9	C-C	1959	76
834	–	25014	EMD	SD-9	C-C	1959	76
835	–	25015	EMD	SD-9	C-C	1959	76
836	–	25016	EMD	SD-9	C-C	1959	76
837	–	25017	EMD	SD-9	C-C	1959	76
838	–	25018	EMD	SD-9	C-C	1959	76
839	–	25019	EMD	SD-9	C-C	1959	76
840	–	25020	EMD	SD-9	C-C	1959	76
841	–	25021	EMD	SD-9	C-C	1959	76
842	–	25022	EMD	SD-9	C-C	1959	76

C&S ENG. NUMBER	PREVIOUS NUMBER	SERIAL NUMBER	BLDR.	MODEL	AAR DESIG'N.	YEAR	PAGE
868	–	38366	EMD	SD-45	C-C	1971	86
869	–	38367	EMD	SD-45	C-C	1971	86
870	–	36368	EMD	SD-45	C-C	1971	86
871	–	36369	EMD	SD-45	C-C	1971	86
872	–	38370	EMD	SD-45	C-C	1971	86
873	–	38371	EMD	SD-45	C-C	1971	86
874	–	38372	EMD	SD-45	C-C	1971	86
875	–	33516	EMD	SD-40	C-C	1967	80
876	–	33517	EMD	SD-40	C-C	1967	80
877	–	33518	END	SD-40	C-C	1967	80
878	–	33519	EMD	SD-40	C-C	1967	80
879	–	33918	EMD	SD-40	C-C	1968	80
880	–	33919	EMD	SD-40	C-C	1968	80
881	–	33920	EMD	SD-40	C-C	1968	80
882	–	33921	EMD	SD-40	C-C	1968	80
883	–	33922	EMD	SD-40	C-C	1968	80

COLORADO & SOUTHERN — INDEX — COLORADO & SOUTHERN

C&S ENG. NUMBER	PREVIOUS NUMBER	SERIAL NUMBER	BLDR.	MODEL	AAR DESIG'N.	YEAR	PAGE
884	–	33923	EMD	SD-40	C-C	1968	80
885	–	33924	EMD	SD-40	C-C	1968	80
886	–	33925	EMD	SD-40	C-C	1968	80
887	–	33926	EMD	SD-40	C-C	1968	80
890	–	36791	GE	U3O-C	C-C	1968	102
891	–	36792	GE	U3O-C	C-C	1968	102
892	–	36793	GE	U3O-C	C-C	1968	102
893	–	36794	GE	U30-C	C-C	1968	102
900	–	5812-1	EMD	SD40-2	C-C	1972	84

C&S ENG. NUMBER	PREVIOUS NUMBER	SERIAL NUMBER	BLDR.	MODEL	AAR DESIG'N.	YEAR	PAGE
901	–	5812-2	EMD	SD40-2	C-C	1972	84
902	–	5812-3	EMD	SD40-2	C-C	1972	84
903	–	5812-4	EMD	SD40-2	C-C	1972	84
904	–	5812-5	EMD	SD40-2	C-C	1972	84
905	–	5812-6	EMD	SD40-2	C-C	1972	84
906	–	5812-7	EMD	SD40-2	C-C	1972	84
907	–	5812-8	EMD	SD40-2	C-C	1972	84
908	–	5812-9	EMD	SD40-2	C-C	1972	84
909	–	5812-10	EMD	SD40-2	C-C	1972	84
910	–	5812-11	EMD	SD40-2	C-C	1972	84
911	–	5812-12	EMD	SD40-2	C-C	1972	84
912	–	5812-13	EMD	SD40-2	C-C	1972	84
913	–	5812-14	EMD	SD40-2	C-C	1972	84
914	–	5812-15	EMD	SD40-2	C-C	1972	84
915	–	5812-16	EMD	SD40-2	C-C	1972	84
916	–	5812-17	EMD	SD40-2	C-C	1972	84
917	–	5812-18	EMD	SD40-2	C-C	1972	84

COLORADO & SOUTHERN — INDEX — COLORADO & SOUTHERN

C&S ENG. NUMBER	PREVIOUS NUMBER	SERIAL NUMBER	BLDR.	MODEL	AAR DESIG'N.	YEAR	PAGE
918	–	73666-1	EMD	SD40-2	C-C	1974	84
919	–	73666-2	EMD	SD40-2	C-C	1974	84
920	–	73666-3	EMD	SD40-2	C-C	1974	84
921	–	73666-4	EMD	SD40-2	C-C	1974	84
922	–	73666-5	EMD	SD40-2	C-C	1974	84
923	–	73666-6	EMD	SD40-2	C-C	1974	84
924	–	73666-7	EMD	SD40-2	C-C	1974	84
925	–	73666-8	EMD	SD40-2	C-C	1974	84
930	–		EMD	SD40-2	C-C	1977	
931	–		EMD	SD40-2	C-C	1977	
932	–		EMD	SD40-2	C-C	1977	
933	–		EMD	SD40-2	C-C	1977	
934	–		EMD	SD40-2	C-C	1977	

C&S ENG. NUMBER	PREVIOUS NUMBER	SERIAL NUMBER	BLDR.	MODEL	AAR DESIG'N.	YEAR	PAGE
935	–		EMD	SD40-2	C-C	1977	
936	–		EMD	SD40-2	C-C	1977	
937	–		EMD	SD40-2	C-C	1977	
938	–		EMD	SD40-2	C-C	1977	
939	–		EMD	SD40-2	C-C	1977	
940	–		EMD	SD40-2	C-C	1977	
941	–		EMD	SD40-2	C-C	1977	
942	–		EMD	SD40-2	C-C	1977	
943	–		EMD	SD40-2	C-C	1977	
944	–		EMD	SD40-2	C-C	1977	
945	–		EMD	SD40-2	C-C	1977	
946	–		EMD	SD40-2	C-C	1977	
947	–		EMD	SD40-2	C-C	1977	
948	–		EMD	SD40-2	C-C	1977	
949	–		EMD	SD40-2	C-C	1977	
950	–	74648-1	EMD	SD40-2	C-C	1974	84
951	–	74648-2	EMD	SD40-2	C-C	1974	84

COLORADO & SOUTHERN — INDEX — COLORADO & SOUTHERN

C&S ENG. NUMBER	PREVIOUS NUMBER	SERIAL NUMBER	BLDR.	MODEL	AAR DESIG'N.	YEAR	PAGE
952	–	74648-3	EMD	SD40-2	C-C	1974	84
953	–	74648-4	EMD	SD40-2	C-C	1974	84
954	–	74648-5	EMD	SD40-2	C-C	1974	84
955	–	74648-6	EMD	SD40-2	C-C	1974	84
956	–	74648-7	EMD	SD40-2	C-C	1974	84
957	–	74648-8	EMD	SD40-2	C-C	1974	84
958	–	74648-9	EMD	SD40-2	C-C	1974	84
959	–	74648-10	EMD	SD40-2	C-C	1974	84
960			EMD	SD40-2	C-C	1977	
961			EMD	SD40-2	C-C	1977	

C&S ENG. NUMBER	PREVIOUS NUMBER	SERIAL NUMBER	BLDR.	MODEL	AAR DESIG'N.	YEAR	PAGE
980	–	73668-1	EMD	SD40-2	C-C	1974	84
996	–	73669-1	EMD	SD40-2	C-C	1974	84

FORT WORTH & DENVER — INDEX — FORT WORTH & DENVER

FW&D ENG. NUMBER	PREVIOUS NUMBER	SERIAL NUMBER	BLDR.	MODEL	AAR DESIG'N.	YEAR	PAGE
605	–	3923	EMD	NW-2	B-B	1946	2
606	–	3924	EMD	NW-2	B-B	1946	2
607	–	25043	EMD	SW-12	B-B	1959	22
608	–	25044	EMD	SW-12	B-B	1959	22
609	–	25045	EMD	SW-12	B-B	1959	22
610	–	25046	EMD	SW-12	B-B	1959	22
700	GN 600	11049	EMD	GP-7	B-B	1950	54
701	GN 601	11050	EMD	GP-7	B-B	1950	54
702	GN 602	11051	EMD	GP-7	B-B	1950	54
703	GN 603	11052	EMD	GP-7	B-B	1950	54

FW&D ENG. NUMBER	PREVIOUS NUMBER	SERIAL NUMBER	BLDR.	MODEL	AAR DESIG'N.	YEAR	PAGE
850	–	17121	EMD	SD-7	C-C	1953	74
851	–	17122	EMD	SD-7	C-C	1953	74
852	–	17123	EMD	SD-7	C-C	1953	74
853	–	17124	EMD	SD-7	C-C	1953	74
854	–	17125	EMD	SD-7	C-C	1953	74
855	–	17126	EMD	SD-7	C-C	1953	74
856	–	17127	EMD	SD-7	C-C	1953	74
857	–	17128	EMD	SD-7	C-C	1953	74
858	–	17921	EMD	SD-7	C-C	1953	74
859	–	17922	EMD	SD-7	C-C	1953	74

— INDEX —

B.N. ENG. NUMBER	PREVIOUS NUMBER	SERIAL NUMBER	BLDR.	MODEL	AAR DESIG'N.	YEAR	PAGE
1700	NP 200	19544	EMD	GP-9	B-B	1954	56
1701	NP 201	19545	EMD	GP-9	B-B	1954	56
1702	NP 202	19546	EMD	GP-9	B-B	1954	56
1703	NP 203	19547	EMD	GP-9	B-B	1954	56
1704	NP 204	20336	EMD	GP-9	B-B	1955	56
1705	NP 205	20337	EMD	GP-9	B-B	1955	56
1706	NP 206	20338	EMD	GP-9	B-B	1955	56

B.N. ENG. NUMBER	PREVIOUS NUMBER	SERIAL NUMBER	BLDR.	MODEL	AAR DESIG'N.	YEAR	PAGE
1707	NP 207	20339	EMD	GP-9	B-B	1955	56
1708	NP 208	20340	EMD	GP-9	B-B	1955	56
1709	NP 209	20341	EMD	GP-9	B-B	1955	56
1710	NP 210	20342	EMD	GP-9	B-B	1955	56
1711	NP 211	20343	EMD	GP-9	B-B	1955	56
1712	NP 212	20344	EMD	GP-9	B-B	1955	56
1713	NP 213	20345	EMD	GP-9	B-B	1955	56
1714	NP 241	20644	EMD	GP-9	B-B	1955	56
1715	NP 242	20645	EMD	GP-9	B-B	1955	56
1716	NP 243	21020	EMD	GP-9	B-B	1955	56
1717	NP 269	21226	EMD	GP-9	B-B	1956	56
1718	NP 270	21227	EMD	GP-9	B-B	1956	56
1719	NP 271	21228	EMD	GP-9	B-B	1956	56
1720	NP 272	21229	EMD	GP-9	B-B	1956	56
1721	NP 273	21230	EMD	GP-9	B-B	1956	56
1722	NP 274	21231	EMD	GP-9	B-B	1956	56
1723	NP 285	22768	EMD	GP-9	B-B	1957	56

— INDEX —

B.N. ENG. NUMBER	PREVIOUS NUMBER	SERIAL NUMBER	BLDR.	MODEL	AAR DESIG'N.	YEAR	PAGE
1724	NP 286	22769	EMD	GP-9	B-B	1957	56
1725	NP 287	22770	EMD	GP-9	B-B	1957	56
1726	NP 288	22771	EMD	GP-9	B-B	1957	56
1727	NP 289	22772	EMD	GP-9	B-B	1957	56
1728	NP 290	22773	EMD	GP-9	B-B	1957	56
1729	NP 291	22774	EMD	GP-9	B-B	1957	56
1730	NP 292	22775	EMD	GP-9	B-B	1957	56
1731	NP 293	22776	EMD	GP-9	B-B	1957	56
1732	NP 294	22777	EMD	GP-9	B-B	1957	56
1733	NP 295	22778	EMD	GP-9	B-B	1957	56
1734	NP 296	22779	EMD	GP-9	B-B	1957	56
1735	NP 297	22780	EMD	GP-9	B-B	1957	56
1736	NP 298	22781	EMD	GP-9	B-B	1957	56
1737	NP 299	22782	EMD	GP-9	B-B	1957	56
1738	NP 300	22783	EMD	GP-9	B-B	1957	56
1739	NP 301	22784	EMD	GP-9	B-B	1957	56
1740	NP 302	22785	EMD	GP-9	B-B	1957	56
1741	NP 303	22786	EMD	GP-9	B-B	1957	56
1742	NP 304	22787	EMD	GP-9	B-B	1957	56
1743	NP 305	22708	EMD	GP-9	B-B	1957	56
1744	NP 306	22709	EMD	GP-9	B-B	1957	56
1745	NP 307	22710	EMD	GP-9	B-B	1957	56
1746	NP 308	22711	EMD	GP-9	B-B	1957	56
1747	NP 309	22712	EMD	GP-9	B-B	1957	56
1748	NP 310	22713	EMD	GP-9	B-B	1957	56
1749	NP 311	22714	EMD	GP-9	B-B	1957	56
1750	NP 312	22715	EMD	GP-9	B-B	1957	56
1751	NP 313	22716	EMD	GP-9	B-B	1957	56
1752	NP 314	22717	EMD	GP-9	B-B	1957	56
1753	NP 315	22718	EMD	GP-9	B-B	1957	56
1754	NP 316	22719	EMD	GP-9	B-B	1957	56
1755	NP 345	24014	EMD	GP-9	B-B	1958	56
1756	NP 346	24015	EMD	GP-9	B-B	1958	56
1757	NP 347	24016	EMD	GP-9	B-B	1958	56

— INDEX —

B.N. ENG. NUMBER	PREVIOUS NUMBER	SERIAL NUMBER	BLDR.	MODEL	AAR DESIG'N.	YEAR	PAGE
1758	NP 348	24017	EMD	GP-9	B-B	1958	56
1759	NP 349	24018	EMD	GP-9	B-B	1958	56
1760	NP 350	24019	EMD	GP-9	B-B	1958	56
1761	GN688	22468	EMD	GP-9	B-B	1957	56
1762	GN 689	22469	EMD	GP-9	B-B	1957	56
1763	GN 690	22470	EMD	GP-9	B-B	1957	56
1764	BN 1776	20846	EMD	GP-9	B-B	1955	56
1765	GN 692	22472	EMD	GP-9	B-B	1957	56
1766	GN 693	22473	EMD	GP-9	B-B	1957	56
1767	GN 694	22474	EMD	GP-9	B-B	1957	56
1768	GN 695	22475	EMD	GP-9	B-B	1957	56
1769	GN 696	22476	EMD	GP-9	B-B	1957	56
1770	GN 697	22477	EMD	GP-9	B-B	1957	56
1771	GN 698	22478	EMD	GP-9	B-B	1957	56
1772	GN 699	22479	EMD	GP-9	B-B	1957	56
1773	GN 700	20843	EMD	GP-9	B-B	1955	56
1774	GN 701	20844	EMD	GP-9	B-B	1955	56
1775	GN 702	20845	EMD	GP-9	B-B	1955	56
1776	BN 5325	38355	GE	U30-C	C-C	1972	102
1777	GN 704	21083	EMD	GP-9	B-B	1956	56
1778	GN 705	21084	EMD	GP-9	B-B	1956	56
1779	GN 706	21085	EMD	GP-9	B-B	1956	56
1780	GN 707	21086	EMD	GP-9	B-B	1956	56
1781	GN 708	21087	EMD	GP-9	B-B	1956	56
1782	GN 709	21088	EMD	GP-9	B-B	1956	56
1783	GN 710	21252	EMD	GP-9	B-B	1956	56
1784	GN 711	21253	EMD	GP-9	B-B	1956	56
1785	GN 712	22480	EMD	GP-9	B-B	1957	56
1786	GN 713	22788	EMD	GP-9	B-B	1957	56
1787	GN 714	22789	EMD	GP-9	B-B	1957	56
1788	GN 715	22790	EMD	GP-9	B-B	1957	56
1789	GN 716	22791	EMD	GP-9	B-B	1957	56
1790	GN 717	22792	EMD	GP-9	B-B	1957	56
1791	GN 718	22793	EMD	GP-9	B-B	1957	56

— INDEX —

B.N. ENG. NUMBER	PREVIOUS NUMBER	SERIAL NUMBER	BLDR.	MODEL	AAR DESIG'N.	YEAR	PAGE
1792	GN 719	22794	EMD	GP-9	B-B	1957	56
1793	BN 1976	21466	EMD	GP-9	B-B	1957	56
1794	GN 721	22796	EMD	GP-9	B-B	1957	56
1795	GN 722	22797	EMD	GP-9	B-B	1957	56
1796	GN 723	24085	EMD	GP-9	B-B	1957	56
1797	GN 724	24086	EMD	GP-9	B-B	1957	56
1799	GN 726	24088	EMD	GP-9	B-B	1957	56
1800	GN 727	24089	EMD	GP-9	B-B	1957	56
1801	NP 253	21098	EMD	GP-9	B-B	1956	56
1802	GN 729	24103	EMD	GP-9	B-B	1958	56
1803	GN 730	24104	EMD	GP-9	B-B	1958	56
1804	GN 731	24105	EMD	GP-9	B-B	1958	56
1805	GN 732	24106	EMD	GP-9	B-B	1958	56
1806	GN 733	25468	EMD	GP-9	B-B	1959	56
1807	GN 734	25467	EMD	GP-9	B-B	1959	56
1808	GN 656	19364	EMD	GP-9	B-B	1954	56

B.N. ENG. NUMBER	PREVIOUS NUMBER	SERIAL NUMBER	BLDR.	MODEL	AAR DESIG'N.	YEAR	PAGE
1809	GN 657	19365	EMD	GP-9	B-B	1954	56
1810	GN 658	19366	EMD	GP-9	B-B	1954	56
1811	GN 659	19367	EMD	GP-9	B-B	1954	56
1812	GN 660	19368	EMD	GP-9	B-B	1954	56
1813	GN 661	19346	EMD	GP-9	B-B	1954	56
1814	GN 662	19347	EMD	GP-9	B-B	1954	56
1815	GN 663	19348	EMD	GP-9	B-B	1954	56
1816	GN 664	19349	EMD	GP-9	B-B	1954	56
1817	GN 665	19350	EMD	GP-9	B-B	1954	56
1818	GN 666	19351	EMD	GP-9	B-B	1954	56
1819	GN 667	19352	EMD	GP-9	B-B	1954	56
1820	GN 668	19353	EMD	GP-9	B-B	1954	56
1821	GN 669	19354	EMD	GP-9	B-B	1954	56
1822	GN 670	19355	EMD	GP-9	B-B	1954	56
1823	GN 671	19356	EMD	GP-9	B-B	1954	56
1824	GN 672	19357	EMD	GP-9	B-B	1954	56
1825	GN 673	19358	EMD	GP-9	B-B	1954	56

— INDEX —

B.N. ENG. NUMBER	PREVIOUS NUMBER	SERIAL NUMBER	BLDR.	MODEL	AAR DESIG'N.	YEAR	PAGE
1826	GN 674	19359	EMD	GP-9	B-B	1954	56
1828	GN 676	19361	EMD	GP-9	B-B	1954	56
1829	GN 677	19362	EMD	GP-9	B-B	1954	56
1830	GN 678	19363	EMD	GP-9	B-B	1954	56
1831	GN 679	19369	EMD	GP-9	B-B	1954	56
1832	GN 680	19370	EMD	GP-9	B-B	1954	56
1833	GN 681	21254	EMD	GP-9	B-B	1956	56
1834	GN 682	21255	EMD	GP-9	B-B	1956	56
1835	GN 683	21256	EMD	GP-9	B-B	1956	56
1836	GN 684	21257	EMD	GP-9	B-B	1956	56
1837	GN 685	21258	EMD	GP-9	B-B	1956	56
1838	GN 686	21259	EMD	GP-9	B-B	1956	56
1839	GN 687	21260	EMD	GP-9	B-B	1956	56
1840	NP 214	20346	EMD	GP-9	B-B	1955	56
1841	NP 215	20347	EMD	GP-9	B-B	1955	56
1842	NP 216	20348	EMD	GP-9	B-B	1955	56

B.N. ENG. NUMBER	PREVIOUS NUMBER	SERIAL NUMBER	BLDR.	MODEL	AAR DESIG'N.	YEAR	PAGE
1843	NP 217	20349	EMD	GP-9	B-B	1955	56
1844	NP 218	20305	EMD	GP-9	B-B	1955	56
1845	NP 219	20306	EMD	GP-9	B-B	1955	56
1846	NP 220	20307	EMD	GP-9	B-B	1955	56
1847	NP 221	20308	EMD	GP-9	B-B	1955	56
1848	NP 222	20309	EMD	GP-9	B-B	1955	56
1849	NP 223	20310	EMD	GP-9	B-B	1955	56
1850	NP 224	20311	EMD	GP-9	B-B	1955	56
1851	NP 225	20312	EMD	GP-9	B-B	1955	56
1852	NP 226	20313	EMD	GP-9	B-B	1955	56
1853	NP 227	20314	EMD	GP-9	B-B	1955	56
1854	NP 228	20315	EMD	GP-9	B-B	1955	56
1855	NP 229	20316	EMD	GP-9	B-B	1955	56
1856	NP 230	20317	EMD	GP-9	B-B	1955	56
1857	NP 231	20318	EMD	GP-9	B-B	1955	56
1858	NP 232	20319	EMD	GP-9	B-B	1955	56
1859	NP 233	20370	EMD	GP-9	B-B	1955	56

– INDEX –

B.N. ENG. NUMBER	PREVIOUS NUMBER	SERIAL NUMBER	BLDR.	MODEL	AAR DESIG'N.	YEAR	PAGE
1860	NP 234	20371	EMD	GP-9	B-B	1955	56
1861	NP 235	20372	EMD	GP-9	B-B	1955	56
1862	NP 236	20373	EMD	GP-9	B-B	1955	56
1863	NP 237	20374	EMD	GP-9	B-B	1955	56
1864	NP 238	20641	EMD	GP-9	B-B	1955	56
1865	NP 239	20642	EMD	GP-9	B-B	1955	56
1866	NP 240	20643	EMD	GP-9	B-B	1955	56
1867	NP 244	21089	EMD	GP-9	B-B	1956	56
1868	NP 245	21090	EMD	GP-9	B-B	1956	56
1869	NP 246	21091	EMD	GP-9	B-B	1956	56
1870	NP 247	21092	EMD	GP-9	B-B	1956	56
1871	NP 248	21093	EMD	GP-9	B-B	1956	56
1872	NP 249	21094	EMD	GP-9	B-B	1956	56
1873	NP 250	21095	EMD	GP-9	B-B	1956	56
1874	NP 251	21096	EMD	GP-9	B-B	1956	56
1875	NP 252	21097	EMD	GP-9	B-B	1956	56
1876	BN 6325	5803-1	EMD	SD-40-2	C-C	1972	84
1877	NP 254	21099	EMD	GP-9	B-B	1956	56
1878	NP 255	21427	EMD	GP-9	B-B	1956	56
1879	NP 256	21428	EMD	GP-9	B-B	1956	56
1880	NP 257	21429	EMD	GP-9	B-B	1956	56
1881	NP 258	21430	EMD	GP-9	B-B	1956	56
1882	NP 259	21431	EMD	GP-9	B-B	1956	56
1883	NP 260	21432	EMD	GP-9	B-B	1956	56
1884	NP 261	21218	EMD	GP-9	B-B	1956	56
1885	NP 262	21219	EMD	GP-9	B-B	1956	56
1886	NP 263	21220	EMD	GP-9	B-B	1956	56
1887	NP 264	21221	EMD	GP-9	B-B	1956	56
1888	NP 265	21222	EMD	GP-9	B-B	1956	56
1889	NP 266	21223	EMD	GP-9	B-B	1956	56
1890	NP 267	21224	EMD	GP-9	B-B	1956	56
1891	NP 268	21225	EMD	GP-9	B-B	1956	.56
1892	NP 275	21232	EMD	GP-9	B-B	1956	56
1893	NP 276	21233	EMD	GP-9	B-B	1956	56

— INDEX —

B.N. ENG. NUMBER	PREVIOUS NUMBER	SERIAL NUMBER	BLDR.	MODEL	AAR DESIG'N.	YEAR	PAGE
1894	NP 277	21234	EMD	GP-9	B-B	1957	56
1895	NP 278	21235	EMD	GP-9	B-B	1957	56
1896	NP 279	21236	EMD	GP-9	B-B	1957	56
1897	NP 280	21237	EMD	GP-9	B-B	1957	56
1898	NP 281	21238	EMD	GP-9	B-B	1957	56
1899	NP 282	21239	EMD	GP-9	B-B	1957	56
1900	NP 283	21240	EMD	GP-9	B-B	1957	56
1901	NP 284	21241	EMD	GP-9	B-B	1957	56
1902	NP 317	22720	EMD	GP-9	B-B	1957	56
1903	NP 318	22721	EMD	GP-9	B-B	1957	56
1904	NP 319	22722	EMD	GP-9	B-B	1957	56
1905	NP 320	22723	EMD	GP-9	B-B	1957	56
1906	NP 321	22724	EMD	GP-9	B-B	1957	56
1907	NP 322	22725	EMD	GP-9	B-B	1957	56
1908	NP 323	22726	EMD	GP-9	B-B	1957	56
1909	NP 324	22727	EMD	GP-9	B-B	1957	56
1910	NP 325	22728	EMD	GP-9	B-B	1957	56
1911	NP 326	22729	EMD	GP-9	B-B	1957	56
1912	NP 327	22730	EMD	GP-9	B-B	1957	56
1913	NP 328	22731	EMD	GP-9	B-B	1957	56
1914	NP 329	22732	EMD	GP-9	B-B	1957	56
1915	NP 330	22733	EMD	GP-9	B-B	1957	56
1916	NP 331	22734	EMD	GP-9	B-B	1957	56
1917	NP 332	22735	EMD	GP-9	B-B	1957	56
1918	NP 333	22736	EMD	GP-9	B-B	1957	56
1919	NP 334	22737	EMD	GP-9	B-B	1957	56
1920	NP 335	22738	EMD	GP-9	B-B	1957	56
1921	NP 336	22739	EMD	GP-9	B-B	1957	56
1922	NP 337	22740	EMD	GP-9	B-B	1957	56
1923	NP 338	22741	EMD	GP-9	B-B	1957	56
1924	NP 339	22742	EMD	GP-9	B-B	1957	56
1925	NP 340	22743	EMD	GP-9	B-B	1957	56
1926	NP 341	22744	EMD	GP-9	B-B	1957	56
1927	NP 342	22745	EMD	GP-9	B-B	1957	56

— INDEX —

B.N. ENG. NUMBER	PREVIOUS NUMBER	SERIAL NUMBER	BLDR.	MODEL	AAR DESIG'N.	YEAR	PAGE
1928	NP 343	22746	EMD	GP-9	B-B	1957	56
1929	NP 344	22747	EMD	GP-9	B-B	1957	56
1930	NP 351	24020	EMD	GP-9	B-B	1958	56
1931	NP 352	24021	EMD	GP-9	B-B	1958	56
1932	NP 353	24022	EMD	GP-9	B-B	1958	56
1933	NP 354	24023	EMD	GP-9	B-B	1958	56
1934	NP 355	24024	EMD	GP-9	B-B	1958	56
1935	NP 356	24025	EMD	GP-9	B-B	1958	56
1936	NP 357	24026	EMD	GP-9	B-B	1958	56
1937	NP 358	24048	EMD	GP-9	B-B	1958	56
1938	NP 359	24049	EMD	GP-9	B-B	1958	56
1939	NP 360	24050	EMD	GP-9	B-B	1958	56
1940	NP 361	24051	EMD	GP-9	B-B	1958	56
1941	NP 362	24052	EMD	GP-9	B-B	1958	56
1942	NP 363	24053	EMD	GP-9	B-B	1958	56
1943	NP 364	24054	EMD	GP-9	B-B	1958	56
1944	NP 365	24055	EMD	GP-9	B-B	1958	56
1945	NP 366	24056	EMD	GP-9	B-B	1958	56
1946	NP 367	24057	EMD	GP-9	B-B	1958	56
1947	NP 368	24058	EMD	GP-9	B-B	1958	56
1948	NP 369	24059	EMD	GP-9	B-B	1958	56
1949	NP 370	24060	EMD	GP-9	B-B	1958	56
1950	NP 371	24061	EMD	GP-9	B-B	1958	56
1951	NP 372	24472	EMD	GP-9	B-B	1958	56
1952	NP 373	24473	EMD	GP-9	B-B	1958	56
1953	NP 374	24474	EMD	GP-9	B-B	1958	56
1954	NP 375	24475	EMD	GP-9	B-B	1958	56
1955	Q 270	19609	EMD	GP-9	B-B	1954	56
1956	Q 271	19610	EMD	GP-9	B-B	1954	56
1957	Q 272	19611	EMD	GP-9	B-B	1954	56
1958	Q 273	19612	EMD	GP-9	B-B	1954	56
1959	Q 274	19613	EMD	GP-9	B-B	1954	56
1960	Q 275	19614	EMD	GP-9	B-B	1954	56
1961	Q 276	19615	EMD	GP-9	B-B	1954	56

— INDEX —

B.N. ENG. NUMBER	PREVIOUS NUMBER	SERIAL NUMBER	BLDR.	MODEL	AAR DESIG'N.	YEAR	PAGE
1962	Q 277	19616	EMD	GP-9	B-B	1954	56
1963	Q 278	19617	EMD	GP-9	B-B	1954	56
1964	Q 279	19618	EMD	GP-9	B-B	1954	56
1965	Q 280	19619	EMD	GP-9	B-B	1954	56
1966	Q 281	19620	EMD	GP-9	B-B	1954	56
1967	Q 282	19621	EMD	GP-9	B-B	1954	56
1968	Q 283	19622	EMD	GP-9	B-B	1954	56
1969	Q 284	19623	EMD	GP-9	B-B	1954	56
1970	Q 285	19624	EMD	GP-9	B-B	1954	56
1971	Q 286	19625	EMD	GP-9	B-B	1954	56
1972	Q 287	19626	EMD	GP-9	B-B	1954	56
1973	Q 288	19627	EMD	GP-9	B-B	1954	56
1974	Q 289	19628	EMD	GP-9	B-B	1954	56
1975	SPS 150	21465	EMD	GP-9	B-B	1956	56
1976	BN 6397	31595	EMD	SDP 40	C-C	1966	82
1977	SPS 152	21467	EMD	GP-9	B-B	1956	56
1978	SPS 153	21468	EMD	GP-9	B-B	1956	56
1979	SPS 154	21469	EMD	GP-9	B-B	1956	56
1980	SPS 155	21470	EMD	GP-9	B-B	1956	56
1990	NP 376	26008	EMD	GP-18	B-B	1960	60
1991	NP 377	26009	EMD	GP-18	B-B	1960	60
1992	NP 378	26010	EMD	GP-18	B-B	1960	60
1993	NP 379	26011	EMD	GP-18	B-B	1960	60
1994	NP 380	26012	EMD	GP-18	B-B	1960	60
1995	NP 381	26013	EMD	GP-18	B-B	1960	60
1996	NP 382	26014	EMD	GP-18	B-B	1960	60
1997	NP 383	26015	EMD	GP-18	B-B	1960	60
1998	NP 384	26016	EMD	GP-18	B-B	1960	60
2001	GN 2001	25562	EMD	GP-20	B-B	1960	62

— INDEX —

B.N. ENG. NUMBER	PREVIOUS NUMBER	SERIAL NUMBER	BLDR.	MODEL	AAR DESIG'N.	YEAR	PAGE
2002	GN 2002	25563	EMD	GP-20	B-B	1960	62
2003	GN 2003	25564	EMD	GP-20	B-B	1960	62
2004	GN 2004	25565	EMD	GP-20	B-B	1960	62
2005	GN 2005	25566	EMD	GP-20	B-B	1960	62
2006	GN 2006	25567	EMD	GP-20	B-B	1960	62
2007	GN 2007	25568	EMD	GP-20	B-B	1960	62
2008	GN 2008	25569	EMD	GP-20	B-B	1960	62
2009	GN 2009	25570	EMD	GP-20	B-B	1960	62
2010	GN 2010	25571	EMD	GP-20	B-B	1960	62
2011	GN 2011	25572	EMD	GP-20	B-B	1960	62
2012	GN 2012	25700	EMD	GP-20	B-B	1960	62
2014	GN 2014	25702	EMD	GP-20	B-B	1960	62
2015	GN 2015	25703	EMD	GP-20	B-B	1960	62
2016	GN 2016	25704	EMD	GP-20	B-B	1960	62
2017	GN 2017	25705	EMD	GP-20	B-B	1960	62
2018	GN 2018	26286	EMD	GP-20	B-B	1960	62

B.N. ENG. NUMBER	PREVIOUS NUMBER	SERIAL NUMBER	BLDR.	MODEL	AAR DESIG'N.	YEAR	PAGE
2019	GN 2019	26287	EMD	GP-20	B-B	1960	62
2020	GN 2020	26288	EMD	GP-20	B-B	1960	62
2021	GN 2021	26289	EMD	GP-20	B-B	1960	62
2022	GN 2022	26290	EMD	GP-20	B-B	1960	62
2023	GN 2023	26291	EMD	GP-20	B-B	1960	62
2024	GN 2024	26292	EMD	GP-20	B-B	1960	62
2026	GN 2026	26295	EMD	GP-20	B-B	1960	62
2027	GN 2027	26296	EMD	GP-20	B-B	1960	62
2028	GN 2028	26297	EMD	GP-20	B-B	1960	62
2029	GN 2029	26298	EMD	GP-20	B-B	1960	62
2030	GN 2030	26299	EMD	GP-20	B-B	1960	62
2031	GN 2031	26300	EMD	GP-20	B-B	1960	62
2032	GN 2032	26301	EMD	GP-20	B-B	1960	62
2033	GN 2033	26302	EMD	GP-20	B-B	1960	62
2034	GN 2034	26303	EMD	GP-20	B-B	1960	62
2035	GN 2035	26293	EMD	GP-20	B-B	1960	62

— INDEX —

B.N. ENG. NUMBER	PREVIOUS NUMBER	SERIAL NUMBER	BLDR.	MODEL	AAR DESIG'N.	YEAR	PAGE
2036	Q 900	26571	EMD	GP-20	B-B	1961	62
2037	Q 901	26572	EMD	GP-20	B-B	1961	62
2038	Q 902	26573	EMD	GP-20	B-B	1961	62
2039	Q 903	26574	EMD	GP-20	B-B	1961	62
2040	Q 904	26575	EMD	GP-20	B-B	1961	62
2041	Q 905	26576	EMD	GP-20	B-B	1961	62
2042	Q 906	26577	EMD	GP-20	B-B	1961	62
2044	Q 908	26579	EMD	GP-20	B-B	1961	62
2045	Q 909	26580	EMD	GP-20	B-B	1961	62
2046	Q 910	26581	EMD	GP-20	B-B	1961	62
2047	Q 911	26582	EMD	GP-20	B-B	1961	62
2048	Q 912	26583	EMD	GP-20	B-B	1961	62
2049	Q 913	26584	EMD	GP-20	B-B	1961	62
2050	Q 914	26585	EMD	GP-20	B-B	1961	62
2051	Q 915	26586	EMD	GP-20	B-B	1961	62
2052	Q 916	26587	EMD	GP-20	B-B	1961	62

B.N. ENG. NUMBER	PREVIOUS NUMBER	SERIAL NUMBER	BLDR.	MODEL	AAR DESIG'N.	YEAR	PAGE
2053	Q 917	26588	EMD	GP-20	B-B	1961	62
2054	Q 918	26589	EMD	GP-20	B-B	1961	62
2055	Q 919	26590	EMD	GP-20	B-B	1961	62
2056	Q 920	26591	EMD	GP-20	B-B	1961	62
2057	Q 921	26592	EMD	GP-20	B-B	1961	62
2058	Q 922	26593	EMD	GP-20	B-B	1961	62
2059	Q 923	26594	EMD	GP-20	B-B	1961	62
2060	Q 924	26595	EMD	GP-20	B-B	1961	62
2061	Q 925	26596	EMD	GP-20	B-B	1961	62
2062	Q 926	26597	EMD	GP-20	B-B	1961	62
2063	Q 927	26598	EMD	GP-20	B-B	1961	62
2064	Q 928	26599	EMD	GP-20	B-B	1961	62
2065	Q 929	26600	EMD	GP-20	B-B	1961	62
2066	Q 930	26601	EMD	GP-20	B-B	1961	62
2067	Q 931	26602	EMD	GP-20	B-B	1961	62
2068	Q 932	26603	EMD	GP-20	B-B	1961	62
2069	Q 933	26604	EMD	GP-20	B-B	1961	62

— INDEX —

B.N. ENG. NUMBER	PREVIOUS NUMBER	SERIAL NUMBER	BLDR.	MODEL	AAR DESIG'N.	YEAR	PAGE
2070	Q 934	26605	EMD	GP-20	B-B	1961	62
2071	Q 935	26606	EMD	GP-20	B-B	1961	62
2072	SPS 200	35995	EMD	GP-38	B-B	1970	68
2073	SPS 201	35996	EMD	GP-38	B-B	1970	68
2074	SPS 202	35997	EMD	GP-38	B-B	1970	68
2075	SPS 203	35998	EMD	GP-38	B-B	1970	68
2076	SPS 204	35999	EMD	GP-38	B-B	1970	68
2077	SPS 205	36000	EMD	GP-38	B-B	1970	68
2078	–	7369-1	EMD	GP-38-2	B-B	1972	70
2079	–	7369-2	EMD	GP-38-2	B-B	1972	70
2080	–	7369-3	EMD	GP-38-2	B-B	1972	70
2081	–	7369-4	EMD	GP-38-2	B-B	1972	70
2082	–	7369-5	EMD	GP-38-2	B-B	1972	70
2083	–	7369-6	EMD	GP-38-2	B-B	1972	70
2084	–	7369-7	EMD	GP-38-2	B-B	1972	70
2085	–	7369-8	EMD	GP-38-2	B-B	1972	70
2086	–	7369-9	EMD	GP-38-2	B-B	1972	70
2087	–	7369-10	EMD	GP-38-2	B-B	1972	70
2088	–	74647-1	EMD	GP-38-2	B-B	1974	70
2089	–	74647-2	EMD	GP-38-2	B-B	1974	70
2090	–	74647-3	EMD	GP-38-2	B-B	1974	70
2091	–	74647-4	EMD	GP-38-2	B-B	1974	70
2092	–	74647-5	EMD	GP-38-2	B-B	1974	70
2093	–	74647-6	EMD	GP-38-2	B-B	1974	70
2094	–	74647-7	EMD	GP-38-2	B-B	1974	70
2095	–	74647-8	EMD	GP-38-2	B-B	1974	70
2096	–	74647-9	EMD	GP-38-2	B-B	1974	70
2097	–	74647-10	EMD	GP-38-2	B-B	1974	70
2098	–	74647-11	EMD	GP-38-2	8-B	1974	70
2099	–	74647-12	EMD	GP-38-2	B-B	1974	70
2100	–	74647-13	EMD	GP-38-2	B-B	1974	70
2101	–	74647-14	EMD	GP-38-2	B-B	1974	70
2102	–	74647-15	EMD	GP-38-2	B-B	1974	70
2103	–	74647-16	EMD	GP-38-2	B-B	1974	70

— INDEX —

B.N. ENG. NUMBER	PREVIOUS NUMBER	SERIAL NUMBER	BLDR.	MODEL	AAR DESIG'N.	YEAR	PAGE
2104	–	74647-17	EMD	GP-38-2	B-B	1974	70
2105	–	74647-18	EMD	GP-38-2	B-B	1974	70
2106	–	74647-19	EMD	GP-38-2	B-B	1974	70
2107	–	74647-20	EMD	GP-38-2	B-B	1974	70
2108	–	74647-21	EMD	GP-38-2	B-B	1974	70
2109	–	74647-22	EMD	GP-38-2	B-B	1974	70

B.N. ENG. NUMBER	PREVIOUS NUMBER	SERIAL NUMBER	BLDR.	MODEL	AAR DESIG'N.	YEAR	PAGE

— INDEX —

B.N. ENG. NUMBER	PREVIOUS NUMBER	SERIAL NUMBER	BLDR.	MODEL	AAR DESIG'N.	YEAR	PAGE

B.N. ENG. NUMBER	PREVIOUS NUMBER	SERIAL NUMBER	BLDR.	MODEL	AAR DESIG'N.	YEAR	PAGE
2200	GN 3000	28261	EMD	GP-30	B-B	1963	64
2201	GN 3001	28262	EMD	GP-30	B-B	1963	64
2202	GN 3002	28263	EMD	GP-30	B-B	1963	64
2203	GN 3003	28264	EMD	GP-30	B-B	1963	64
2204	GN 3004	28265	EMD	GP-30	B-B	1963	64
2205	GN 3005	28266	EMD	GP-30	B-B	1963	64

— INDEX —

B.N. ENG. NUMBER	PREVIOUS NUMBER	SERIAL NUMBER	BLDR.	MODEL	AAR DESIG'N.	YEAR	PAGE
2206	GN 3006	28267	EMD	GP-30	B-B	1963	64
2207	GN 3007	28268	EMD	GP-30	B-B	1963	64
2208	GN 3008	28269	EMD	GP-30	B-B	1963	64
2209	GN 3009	28270	EMD	GP-30	B-B	1963	64
2210	GN 3010	28271	EMD	GP-30	B-B	1963	64
2211	GN 3011	28272	EMD	GP-30	B-B	1963	64
2212	GN 3012	28273	EMD	GP-30	B-B	1963	64
2213	GN 3013	28274	EMD	GP-30	B-B	1963	64
2214	GN 3014	28275	EMD	GP-30	B-B	1963	64
2215	GN 3015	28276	EMD	GP-30	B-B	1963	64
2216	GN 3016	28277	EMD	GP-30	B-B	1963	64
2217	Q 940	27151	EMD	GP-30	B-B	1962	64
2218	Q 941	27152	EMD	GP-30	B-B	1962	64
2219	Q 942	27153	EMD	GP-30	B-B	1962	64
2220	Q 943	27154	EMD	GP-30	B-B	1962	64
2221	Q 944	27155	EMD	GP-30	B-B	1962	64
2222	Q 945	27156	EMD	GP-30	B-B	1962	64
2223	Q 946	27157	EMD	GP-30	B-B	1962	64
2224	Q 947	27158	EMD	GP-30	B-B	1962	64
2225	Q 948	27159	EMD	GP-30	B-B	1962	64
2226	Q 949	27160	EMD	GP-30	B-B	1962	64
2227	Q 950	27161	EMD	GP-30	B-B	1962	64
2228	Q 951	27162	EMD	GP-30	B-B	1962	64
2229	Q 952	27163	EMD	GP-30	B-B	1962	64
2231	Q 954	27165	EMD	GP-30	B-B	1962	64
2232	Q 955	27166	EMD	GP-30	B-B	1962	64
2233	Q 956	27167	EMD	GP-30	B-B	1962	64
2234	Q 957	27168	EMD	GP-30	B-B	1962	64
2235	Q 958	27169	EMD	GP-30	B-B	1962	64
2236	Q 959	27170	EMD	GP-30	B-B	1962	64
2237	Q 960	27171	EMD	GP-30	B-B	1962	64
2238	Q 961	27172	EMD	GP-30	B-B	1962	64
2239	Q 962	27173	EMD	GP-30	B-B	1962	64

— INDEX —

B.N. ENG. NUMBER	PREVIOUS NUMBER	SERIAL NUMBER	BLDR.	MODEL	AAR DESIG'N.	YEAR	PAGE
2240	Q 963	27174	EMD	GP-30	B-B	1962	64
2241	Q 964	27175	EMD	GP-30	B-B	1962	64
2242	Q 965	27176	EMD	GP-30	B-B	1962	64
2243	Q 966	27177	EMD	GP-30	B-B	1962	64
2244	Q 967	27178	EMD	GP-30	B-B	1962	64
2245	Q 968	27179	EMD	GP-30	B-B	1962	64
2246	Q 969	27180	EMD	GP-30	B-B	1962	64
2247	Q 970	28292	EMD	GP-30	B-B	1963	64
2248	Q 971	28293	EMD	GP-30	B-B	1963	64
2249	Q 972	28294	EMD	GP-30	B-B	1963	64
2250	Q 973	28295	EMD	GP-30	B-B	1963	64
2251	Q 974	28296	EMD	GP-30	B-B	1963	64
2252	Q 975	28297	EMD	GP-30	B-B	1963	64
2253	Q 976	28298	EMD	GP-30	B-B	1963	64
2254	Q 977	28299	EMD	GP-30	B-B	1963	64

B.N. ENG. NUMBER	PREVIOUS NUMBER	SERIAL NUMBER	BLDR.	MODEL	AAR DESIG'N.	YEAR	PAGE

— INDEX —

B.N. ENG. NUMBER	PREVIOUS NUMBER	SERIAL NUMBER	BLDR.	MODEL	AAR DESIG'N.	YEAR	PAGE

B.N. ENG. NUMBER	PREVIOUS NUMBER	SERIAL NUMBER	BLDR.	MODEL	AAR DESIG'N.	YEAR	PAGE
2500	GN 3017	28433	EMD	GP-35	B-B	1964	66
2501	GN 3018	28434	EMD	GP-35	B-B	1964	66
2502	GN 3019	28435	EMD	GP-35	B-B	1964	66
2503	GN 3020	28436	EMD	GP-35	B-B	1964	66
2504	GN 3021	28437	EMD	GP-35	B-B	1964	66
2505	GN 3022	28438	EMD	GP-35	B-B	1964	66
2506	GN 3023	28439	EMD	GP-35	B-B	1964	66
2507	GN 3024	28440	EMD	GP-35	B-B	1964	66
2508	GN 3025	28441	EMD	GP-35	B-B	1964	66
2509	GN 3026	30114	EMD	GP-35	B-B	1965	66
2510	GN 3027	30115	EMD	GP-35	B-B	1965	66
2511	GN 3028	30116	EMD	GP-35	B-B	1965	66

— INDEX —

B.N. ENG. NUMBER	PREVIOUS NUMBER	SERIAL NUMBER	BLDR.	MODEL	AAR DESIG'N.	YEAR	PAGE
2512	GN 3029	30117	EMD	GP-35	B-B	1965	66
2513	GN 3030	30118	EMD	GP-35	B-B	1965	66
2514	GN 3031	30119	EMD	GP-35	B-B	1965	66
2515	GN 3032	30120	EMD	GP-35	B-B	1965	66
2516	GN 3033	30121	EMD	GP-35	B-B	1965	66
2517	GN 3034	30122	EMD	GP-35	B-B	1965	66
2518	GN 3035	30123	EMD	GP-35	B-B	1965	66
2519	GN 3036	30124	EMD	GP-35	B-B	1965	66
2520	GN 3037	30125	EMD	GP-35	B-B	1965	66
2521	GN 3038	30126	EMD	GP-35	B-B	1965	66
2522	GN 3039	30127	EMD	GP-35	B-B	1965	66
2523	GN 3040	30128	EMD	GP-35	B-B	1965	66
2524	Q 978	28300	EMD	GP-35	B-B	1963	66
2525	Q 979	28301	EMD	GP-35	B-B	1963	66
2526	Q 980	28302	EMD	GP-35	B-B	1963	66
2527	Q 981	28303	EMD	GP-35	B-B	1963	66
2528	Q 982	28979	EMD	GP-35	B-B	1964	66

B.N. ENG. NUMBER	PREVIOUS NUMBER	SERIAL NUMBER	BLDR.	MODEL	AAR DESIG'N.	YEAR	PAGE
2529	Q 983	28980	EMD	GP-35	B-B	1964	66
2530	Q 984	29280	EMD	GP-35	B-B	1964	66
2531	Q 985	29281	EMD	GP-35	B-B	1964	66
2532	Q 986	28981	EMD	GP-35	B-B	1964	66
2533	Q 987	28982	EMD	GP-35	B-B	1964	66
2534	Q 988	28983	EMD	GP-35	B-B	1964	66
2535	Q 989	28984	EMD	GP-35	B-B	1964	66
2536	Q 990	28985	EMD	GP-35	B-B	1964	66
2537	Q 991	28986	EMD	GP-35	B-B	1964	66
2539	Q 993	29283	EMD	GP-35	B-B	1964	66
2540	Q 994	29284	EMD	GP-35	B-B	1964	66
2541	Q 995	29285	EMD	GP-35	B-B	1964	66
2542	Q 996	28987	EMD	GP-35	B-B	1964	66
2543	Q 997	28988	EMD	GP-35	B-B	1964	66
2544	Q 998	28989	EMD	GP-35	B-B	1964	66
2545	Q 999	28990	EMD	GP-35	B-B	1964	66

— INDEX —

B.N. ENG. NUMBER	PREVIOUS NUMBER	SERIAL NUMBER	BLDR.	MODEL	AAR DESIG'N.	YEAR	PAGE
3000	Q 170	32566	EMD	GP-40	B-B	1966	72
3001	Q 171	32567	EMD	GP-40	B-B	1966	72
3002	Q 172	32568	EMD	GP-40	B-B	1966	72
3003	Q 173	32569	EMD	GP-40	B-B	1966	72
3004	Q 174	32570	EMD	GP-40	B-B	1966	72
3005	Q 175	32571	EMD	GP-40	B-B	1966	72
3006	Q 176	32572	EMD	GP-40	B-B	1967	72
3007	Q 177	32573	EMD	GP-40	B-B	1966	72
3008	Q 178	32574	EMD	GP-40	B-B	1966	72
3009	Q 179	32575	EMD	GP-40	B-B	1966	72
3010	Q 180	32576	EMD	GP-40	B-B	1967	72
3011	Q 181	32577	EMD	GP-40	B-B	1967	72
3012	Q 182	32578	EMD	GP-40	B-B	1967	72
3013	Q 183	32579	EMD	GP-40	B-B	1967	72
3014	Q 184	32580	EMD	GP-40	B-B	1967	72
3015	Q 185	32581	EMD	GP-40	B-B	1967	72
3016	Q 186	32582	EMD	GP-40	B-B	1967	72
3017	Q 187	32583	EMD	GP-40	B-B	1967	72
3018	Q 188	32584	EMD	GP-40	B-B	1967	72

— INDEX —

B.N. ENG. NUMBER	PREVIOUS NUMBER	SERIAL NUMBER	BLDR.	MODEL	AAR DESIG'N.	YEAR	PAGE
3019	Q 189	32585	EMD	GP-40	B-B	1967	72
3020	Q 620	33741	EMD	GP-40	B-B	1968	72
3021	Q 621	33742	EMD	GP-40	B-B	1968	72
3022	Q 622	33743	EMD	GP-40	B-B	1968	72
3023	Q 623	33744	EMD	GP-40	B-B	1968	72
3024	Q 624	33745	EMD	GP-40	B-B	1968	72
3025	Q 625	33746	EMD	GP-40	B-B	1968	72
3026	Q 626	33747	EMD	GP-40	B-B	1968	72
3027	Q 627	33748	EMD	GP-40	B-B	1968	72
3028	Q 628	33749	EMD	GP-40	B-B	1968	72
3029	Q 629	33750	EMD	GP-40	B-B	1968	72
3030	Q 630	33751	EMD	GP-40	B-B	1968	72
3031	Q 631	33752	EMD	GP-40	B-B	1968	72
3032	Q 632	33753	EMD	GP-40	B-B	1968	72
3033	Q 633	33754	EMD	GP-40	B-B	1968	72
3034	Q 634	33755	EMD	GP-40	B-B	1968	72
3035	Q 635	33756	EMD	GP-40	B-B	1968	72
3036	Q 636	33757	EMD	GP-40	B-B	1968	72
3037	Q 637	33758	EMD	GP-40	B-B	1968	72
3038	Q 638	33759	EMD	GP-40	B-B	1968	72
3039	Q 639	33760	EMD	GP-40	B-B	1968	72

G.E. U-30-B – 3000 H.P. LOCOMOTIVE

ENGINE NUMBERS
5470-5484

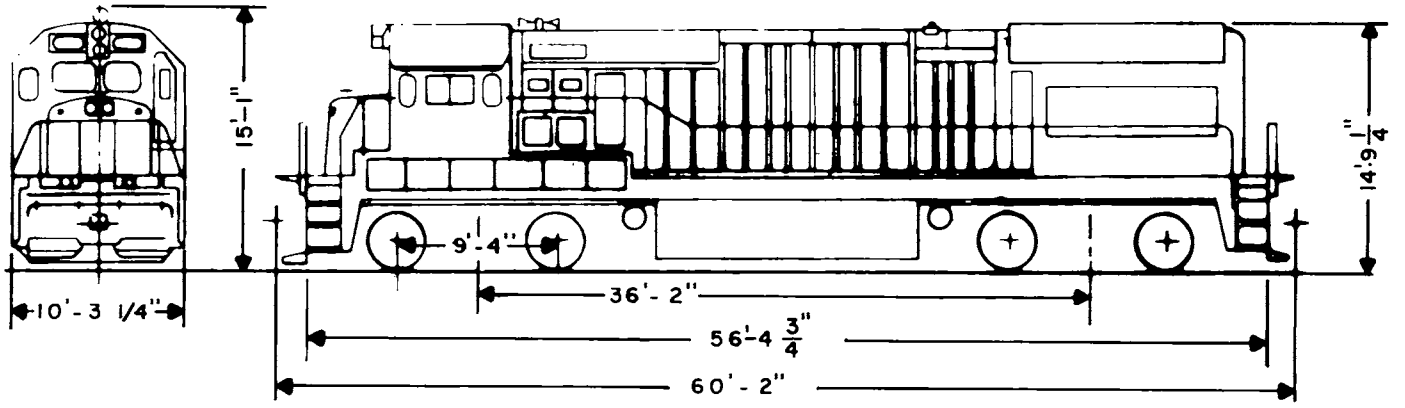

DIESEL ENGINE MODEL . . . 16-7FDL	AIR BRAKE CYLS. . . . . 10"x8"	BATTERY	NOTES:
TRANSITION . . . . . AUTOMATIC	JOURNALS. . . (TKN.) . . . . 6½"x12"	CAPY. . . . . 64V. 420 AMP. HR.	
M.U. CONTROL . . . . . EQUIPPED	GEAR RATIO 23:80	COOLING SYSTEM . . . . . 350 GALS.	
SPEED RECORDER . CHI.PNEUMATIC	DRAFT GEAR M-381	LUB.OIL CAPY. . . . . 380 GALS.	
SAFETY CONTROL . . .FOOT PEDAL	COUPLER . . . (AL.CONT.) . . . . . "E"	SAND CAPY. . . . . 60 CU. FT.	
CONT. RATED SPEED . . . . . 13 MPH			
MAX. SPEED . . . . . 79 MPH		TOILET . . . . . EQUIPPED	

G.E. U-30-C – 3000 H.P. LOCOMOTIVE

B.N. ENG. NUMBER	MAIN GEN.	ALTERNAT.	AUX. GEN.	TRACTION MOTOR	TOTAL WEIGHT	TRACTIVE EFFORT	DYNAMIC BRAKE	AIR BRAKE	AIR COMPRESS.	FUEL CAPY.	EXCITER		
5300-5305	GTA-11C1	NONE	GY-27	752-E8	409,943 LBS.	84,000 LBS.	POTENTIAL	26 L	WBG	4000 GALS.	GY-27		
5306-5319	GTA-11C1	NONE	GY-27	752-E8	411,580 LBS.	84,000 LBS.	POTENTIAL	26 L	WBG	4000 GALS.	GY-27		
5320-5334	GTA-11C1	NONE	GY-27	752-E8	409,947 LBS.	84,000 LBS.	POTENTIAL	26 L	WBG	4000 GALS.	GY-27		
5335-5364	GTA-11C1	NONE	GY-27	752-E8	415,647 LBS.	84,000 LBS.	POTENTIAL	26 L	WBG	4000 GALS.	GY-27		
5365-5394	GTA-11C1	NONE	GY-27	752-E8	410,033 LBS.	84,000 LBS.	POTENTIAL	26 L	WBG	4000 GALS.	GY-27		
5800-5805	GTA-11C1	NONE	GY-27	752-E8	411,580 LBS.	84,000 LBS.	POTENTIAL	26 L	WBG	4000 GALS.	GY-27		
5806-5813	GTA-11C1	NONE	GY-27	752-E8	413,400 LBS.	84,000 LBS.	POTENTIAL	26 L	WBG	4000 GALS.	GY-27		
5814-5823	GTA-11C1	NONE	GY-27	752-E8	411,060 LBS.	84,000 LBS.	POTENTIAL	26 L	WBG	4000 GALS.	GY-27		
5824-5839	GTA-11C1	NONE	GY-27	752-E8	407,033 LBS.	84,000 LBS.	POTENTIAL	26 L	WBG	4000 GALS.	GY-27		
5900-5911	GTA-11C1	NONE	GY-27	752-E8	415,647 LBS.	84,000 LBS.	POTENTIAL	26 L	WBG	4000 GALS.	GY-27		
5912-5918	GTA-11C1	NONE	GY-27	752-E8	412,786 LBS.	84,000 LBS.	POTENTIAL	26 L	WBG	4000 GALS.	GY-27		
5919-5928	GTA-11C1	NONE	GY-27	752-E8	411,186 LBS.	84,000 LBS.	POTENTIAL	26 L	WBG	4000 GALS.	GY-27		
5929-5944	GTA-11C1	NONE	GY-27	752-E8	412,853 LBS.	84,000 LBS.	POTENTIAL	26 L	WBG	4000 GALS.	GY-27		
CS 890-893	GTA-11C1	NONE	GY-27	752-E8	387,750 LBS.	74,000 LBS.	POTENTIAL	26 L	WBG	3250 GALS.	GY-48		
1776	GTA-11C1	NONE	GY-27	752-E8	409,947 LBS.	84,000 LBS.	POTENTIAL	26 L	WBG	4000 GALS.	GY-27		

G.E. U-30-C — 3000 H.P. LOCOMOTIVE

ENGINE NUMBERS
1776, 5300-5394, 5800-5839
5900-5944, CS 890-893

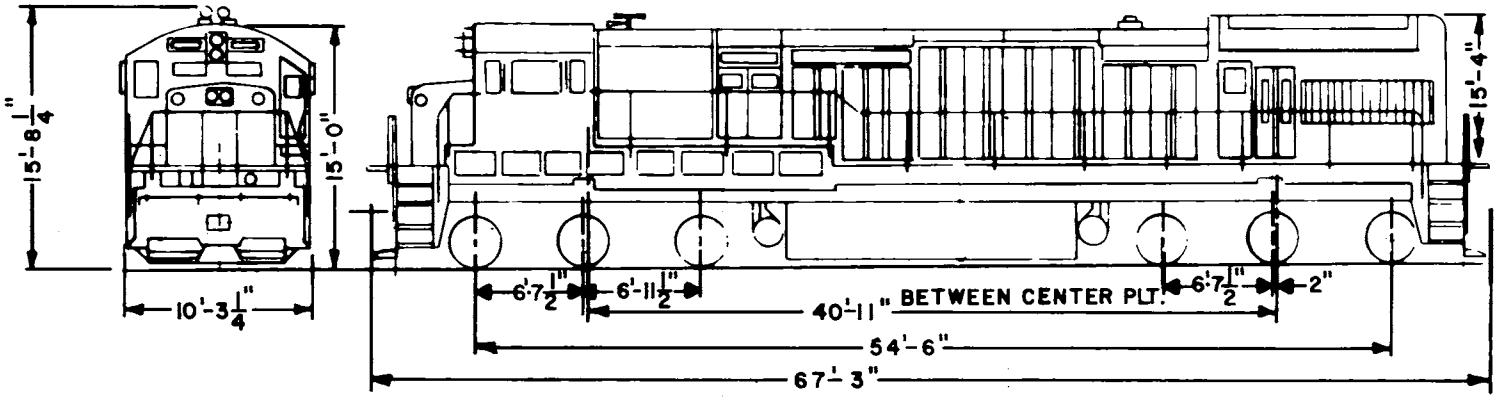

DIESEL ENGINE MODEL . . . 16-7FDL
TRANSITION . . . . . AUTOMATIC
M.U. CONTROL . . . . . EQUIPPED
SPEED RECORDER . CHI.PNEUMATIC
UNITS 5300-5305 . . . . . BARCO
SAFETY CONTROL . . . FOOT PEDAL
CONT. RATED SPEED . . . . . 8.4 MPH
CS UNITS 890-893 . . . . . 11.4 MPH
MAX. SPEED . . . . . 70 MPH
CS UNITS 890-893 . . . . . 79 MPH

AIR BRAKE CYLS. . . . . 12"x4"
JOURNALS . . . HY.RB. . . 6-7/8"x12"
CS UNITS 890-893 . TKN. 6½"x12"
GEAR RATIO 18:74
CS UNITS 890-893 . . . . . 23:80
DRAFT GEAR NC-390
CS UNITS 890-893 . . . . . 23:80
DRAFT GEAR NC-390
CS UNITS 890-893 . . . . . M-381
COUPLER . (AL.CONT.) . . . . . "F"
CS UNITS 890-893 . (AL.CONT.) "E"

·BATTERY CAPY. 64V. 420 AMP. HR.
COOLING SYSTEM . . . . . 385 GALS.
LUB.OIL CAPY. . . . . 380 GALS.
SAND CAPY. . . . . 60 CU. FT.

PACESETTER

LEAD	TRAIL
5335-5340	5300-5323
5800-5839	5341-5352
	5365-5379
	5914-5938

TOILET . . . . . EQUIPPED

NOTES:

BATTERY TRAINLINE
5306-5319
5335-5352
5800-5813
5900-5928

MASTER LOCOTROL UNITS
5800-5839

REMOTE LOCOTROL UNITS
5900-5909

G.E. C30-7 – 3000 H.P. LOCOMOTIVE

B.N. ENG. NUMBER	MAIN GEN.	ALTERNAT.	AUX. GEN.	TRACTION MOTOR	TOTAL WEIGHT	TRACTIVE EFFORT	DYNAMIC BRAKE	AIR BRAKE	AIR COMPRESS	FUEL CAPY.	EXCITER		
5500-5509	GTA-11	None	GY-27	752-E8	417-473 LBS.	84,000 LBS.	POTENTIAL	26 L	WBO	4000 GALS.	GY-27		

G.E. C30-7 – 3000 H.P. LOCOMOTIVE

ENGINE NUMBERS
5500 - 5509

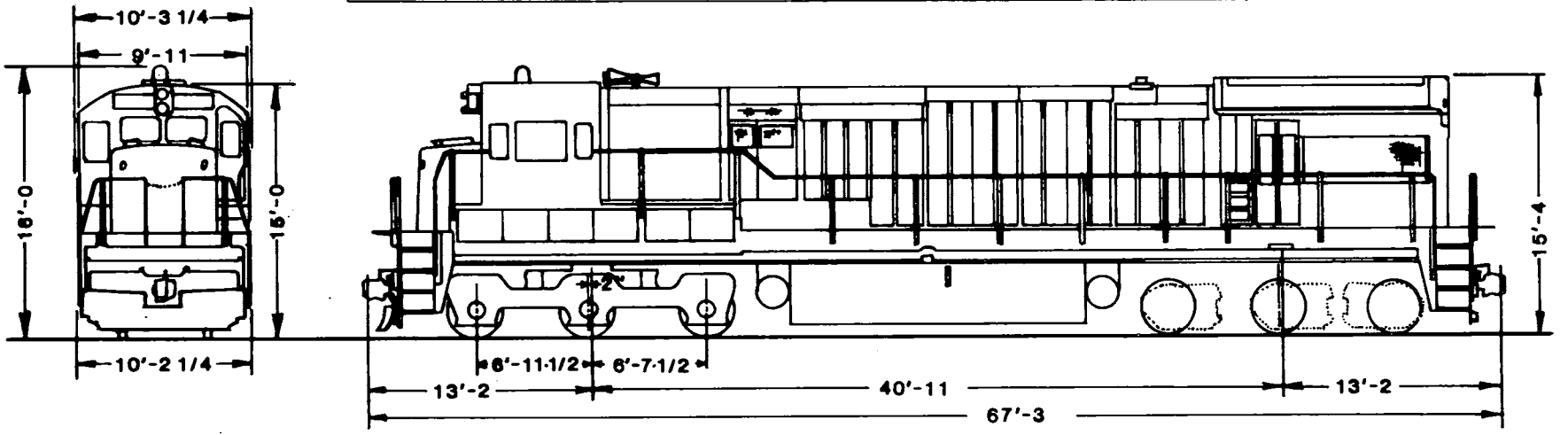

DIESEL ENGINE MODEL . . 16-7FDL TRANSITION . . . . . AUTOMATIC M. U. CONTROL . . . . . EQUIPPED SPEED RECORDER CHI. PNEUMATIC SAFETY CONTROL . . FOOT PEDAL CONT. RATED SPEED . . . . . 8.4 MPH MAX. SPEED . . . . . 70 MPH	AIR BRAKE CYLS. . . . . 12" x 4" JOURNALS . . . . HY. RB. 6-7/8" x 12" GEAR RATIO . . . . . 18:74 DRAFT GEAR . . . . . NC-390 COUPLER . . . . . (AL. CONT.) "F"	BATTERY CAPY. .64 V. 420 AMP. HR. COOLING SYSTEM . . . . . 385 GALS. LUBE OIL CAPY. . . . . 380 GALS SAND CAPY. . . . . 60 CU. FT. PACESETTER LEAD . . . . . 5500-5509 TOILET . . . . . EQUIPPED	NOTES:

G.E. U-33-C – 3300 H.P. LOCOMOTIVE

B.N. ENG. NUMBER	MAIN GEN.	ALTERNAT.	AUX. GEN.	TRACTION MOTOR	TOTAL WEIGHT	TRACTIVE EFFORT	DYNAMIC BRAKE	AIR BRAKE	AIR COMPRESS.	FUEL CAPY.	EXCITER		
5700-5708	GT-A9H3	NONE	25 KW	752-E6	389,900 LBS.	75,000 LBS.	POTENTIAL	26 L	WBG	4000 GALS.	GY-48		
5709-5714	GT-A11A1	NONE	25 KW	752-E8	389,900 LBS.	75,000 LBS.	POTENTIAL	26 L	WBG	4000 GALS.	GY-48		
5715-5724	GT-A11A1	NONE	25 KW	752-E8	389,900 LBS.	82,000 LBS.	POTENTIAL	26 L	3-CWDL	4000 GALS.	GY-48		
5725-5743	GT-A11C1	NONE	12 KW	752-E8	396,353 LBS.	76,500 LBS.	POTENTIAL	26 L	WBG	4000 GALS.	GY-27		
5744-5763	GT-A11C1	NONE	12 KW	752-E8	388,420 LBS.	76,500 LBS.	POTENTIAL	26 L	WBG	4000 GALS.	GY-27		
5764-5765	GT-A11C1	NONE	25 KW	752-E8	410,860 LBS.	79,000 LBS.	POTENTIAL	26 L	WBG	4000 GALS.	GY-48		

G.E. U-33-C – 3300 H.P. LOCOMOTIVE

ENGINE NUMBERS
5700-5765

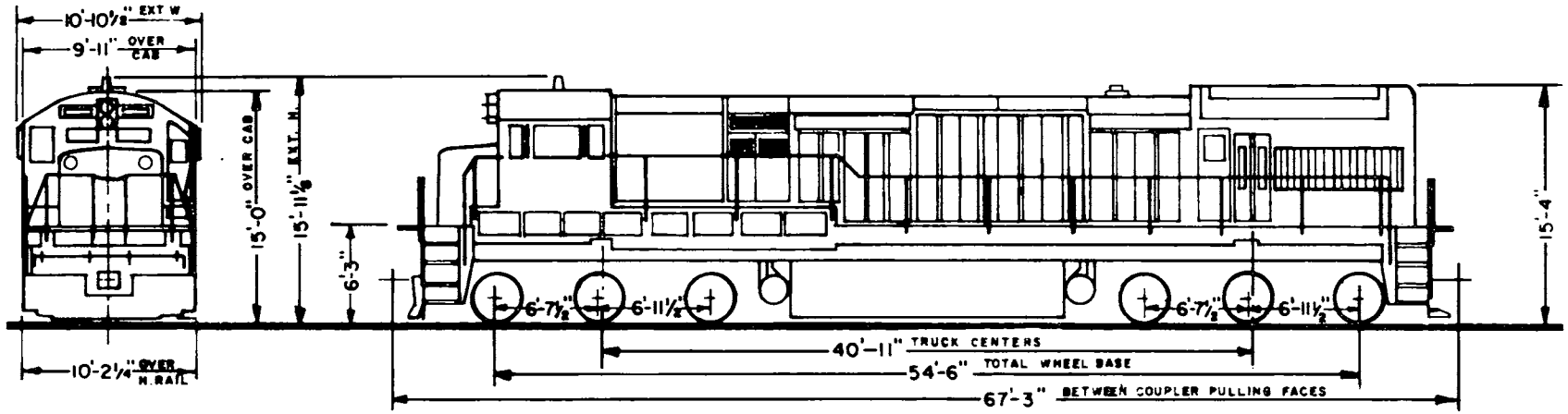

DIESEL ENGINE MODEL . . . 16-7FDL
TRANSITION . . . . . AUTOMATIC
M.U. CONTROL . . . . . EQUIPPED
SPEED RECORDER . . . . . BARCO
UNITS 5715-5724 CHI.PNEUMATIC
SAFETY CONTROL . . . FOOT PEDAL
CONT.RATED SPEED . . . . . 12.7 MPH
UNITS 5715-5724 . . . . . 8.4 MPH
UNITS 5735-5763 . . . . . 9.2 MPH
UNITS 5764-5765 . . . . . 11.0 MPH
MAX. SPEED . . . .(18:74) . . 70 MPH
. . . .(23:80) . . 79 MPH

AIR BRAKE CYLS. . . . . 12"x4"
UNITS 5715-5724,5764-5765 9"x8"
JOURNALS HY.RB. . . . . 6½"x12"
UNITS 5715-5724,
UNITS 5764-5765. .TKN. . 6½"x12"
GEAR RATIO 23:80
UNITS 5715-5724,5764-5765 .18:74
DRAFT GEAR M-380A
COUPLER. . (AL.CONT.) . . . . . "F"
UNITS 5764-5765 (AL.CONT.) "E"

BATTERY CAPY. . 64V. 466 AMP. HR.
COOLING SYSTEM . . . . . 385 GALS.
LUB.OIL CAPY. . . . . 380 GALS.
SAND CAPY. . . . . 60 CU. FT.
SEARCH HARNESS . UNITS 5725-5734

TOILET . . . . . EQUIPPED

NOTES:
MASTER LOCOTROL UNITS
5715, 5716
BATTERY TRAINLINE
5715, 5716
PACESETTER
LEAD 5715-5716 **TRAIL** 5725-5734

ALCO 415 – 1500 H.P. LOCOMOTIVE

B.N. ENG. NUMBER	MAIN GEN.	ALTERNAT.	AUX. GEN.	TRACTION MOTOR	TOTAL WEIGHT	TRACTIVE EFFORT	DYNAMIC BRAKE	AIR BRAKE	AIR COMPRESS.	FUEL CAPY.	EXCITER		
4010-4011	GT-581	NONE	GY50A1	752-EG	258,260 LBS.	42,500 LBS.	NONE	26 N	3-CDBL	1600 GALS.	GY-27F1		

ALCO 415 – 1500 H.P. LOCOMOTIVE

ENGINE NUMBERS
4010-4011

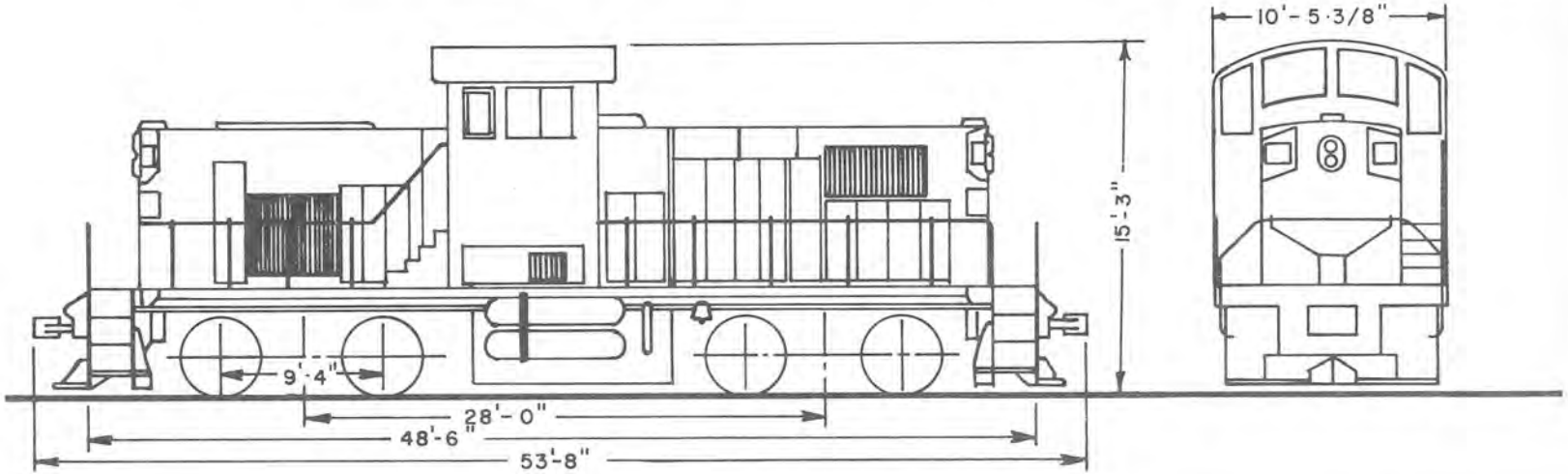

DIESEL ENGINE MODEL . . . . . .8-251 TRANSITION . . . . . AUTOMATIC M.U. CONTROL . . . . . EQUIPPED SPEED RECORDER . CHI.PNEUMATIC SAFETY CONTROL . . .FOOT PEDAL CONT. RATED SPEED . . . . . 10 MPH MAX. SPEED . . . . . 70 MPH	AIR BRAKE CYLS. . . . . .10"x10" JOURNALS. . . .TKN. . . . . 6½"x12" GEAR RATIO . . . . . .18:74 DRAFT GEAR . . . . . M-381 COUPLER . . . (AL.CONT.). . . . . "E"	BATTERY CAPY. . . . . 64V. 426 AMP. HR. COOLING SYSTEM . . . . . 250 GALS. LUB.OIL CAPY. . . . . 180 GALS. SAND CAPY. . . . . 60 CU. FT. TOILET . . . . . .NOT EQUIPPED	NOTES:

ALCO 424 – 2400 H.P. LOCOMOTIVE

B.N. ENG. NUMBER	MAIN GEN.	ALTERNAT.	AUX. GEN.	TRACTION MOTOR	TOTAL WEIGHT	TRACTIVE EFFORT	DYNAMIC BRAKE	AIR BRAKE	AIR COMPRESS.	FUEL CAPY.	EXCITER		
4240-4246	GT-581	NONE	12 KW	752-E6	264,000 LBS.	57,500 LBS.	POTENTIAL	26 L	3 CDBL	2900 GALS.	GY-27F1		

ALCO 424 – 2400 H.P. LOCOMOTIVE

ENGINE NUMBERS
4240-4246

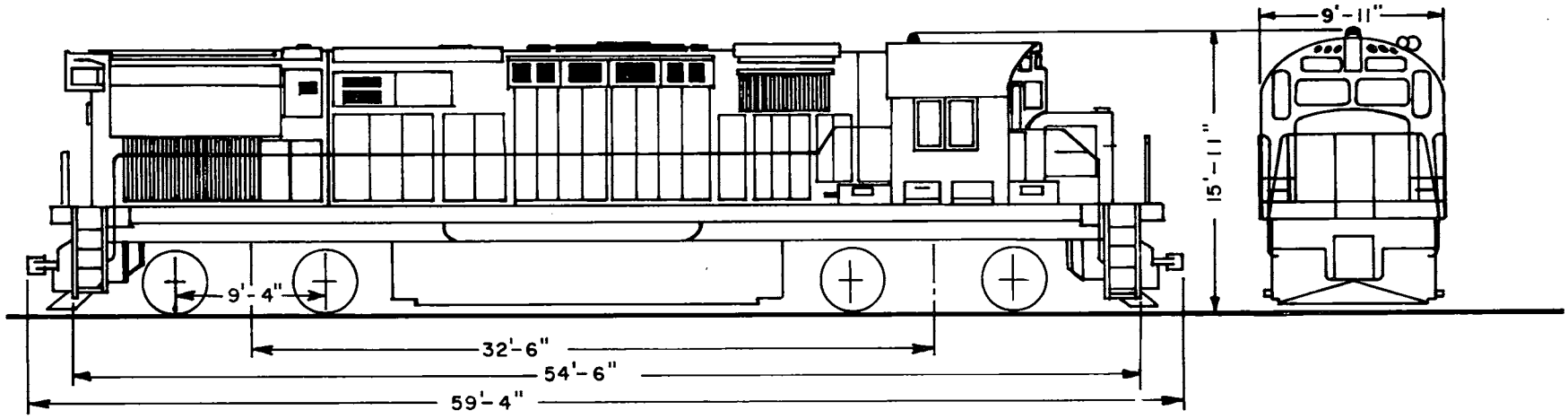

DIESEL ENGINE MODEL . . . . . 16-251 TRANSITION . . . . . AUTOMATIC M.U. CONTROL . . . . . EQUIPPED SPEED RECORDER . CHI.PNEUMATIC SAFETY CONTROL . . . . . NONE CONT. RATED SPEED . . . . . 13 MPH MAX. SPEED . . . . . 70 MPH	AIR BRAKE CYls. . . . . .10"x10" JOURNALS. . . .TKN. . . . . 6½"x12" GEAR RATIO . . . . . .18:74 DRAFT GEAR . . . . . M-381 COUPLER . . . .(AL.CONT.). . . . . "E"	BATTERY CAPY. . . . . 64V. 420 AMP. HR. COOLING SYSTEM . . . . . 280 GALS. LUB.OIL CAPY. . . . . 250 GALS. SAND CAPY. . . . . 48 CU. FT. TOILET . . . . . EQUIPPED	NOTES:

ALCO 425 – 2500 H.P. LOCOMOTIVE

B.N. ENG. NUMBER	MAIN GEN.	ALTERNAT.	AUX. GEN.	TRACTION MOTOR	TOTAL WEIGHT	TRACTIVE EFFORT	DYNAMIC BRAKE	AIR BRAKE	AIR COMPRESS.	FUEL CAPY.	EXCITER		
4252-4257	GT-598	NONE	12 KW	752-E6	270,600 LBS.	57,500 LBS.	POTENTIAL	26 L	3-CDCL	2900 GALS.	GY-27F1		
4258-4264	GT-598	NONE	12 KW	752-E6	270,600 LBS.	57,500 LBS.	POTENTIAL	26 L	3-CDCL	2900 GALS.	GY-27F1		

ALCO 425 – 2500 H.P. LOCOMOTIVE

ENGINE NUMBERS
4252-4264

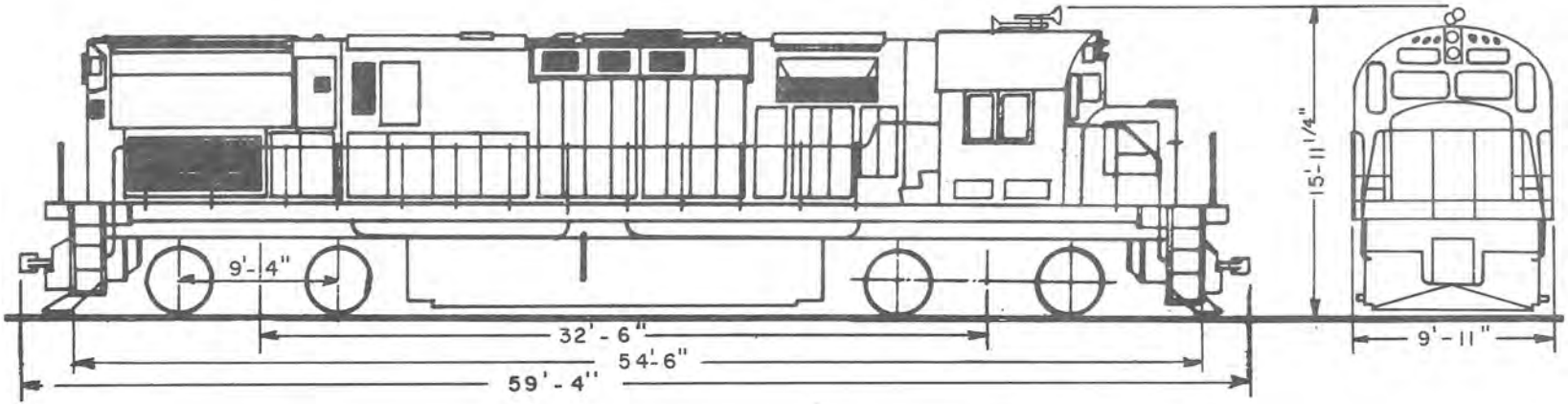

DIESEL ENGINE MODEL 16-25C3	AIR BRAKE CYLS. . . . . .10"x10"	BATTERY	NOTES:
TRANSITION . . . . . AUTOMATIC	JOURNALS. . . .TKN. . . . . 6½"x12"	CAPY. . . . . 64V. 426 AMP. HR.	
M.U. CONTROL . . . . . EQUIPPED	GEAR RATIO 18:74	COOLING SYSTEM . . . . . 250 GALS.	
SPEED RECORDER . CHI.PNEUMATIC	DRAFT GEAR M-381	LUB.OIL CAPY. . . . . 250 GALS.	
SAFETY CONTROL . . . . . NONE	COUPLER . . . . (AL.CONT.). . . . . "E"	SAND CAPY. . . . . 48 CU. FT.	
CONT. RATED SPEED . . . . . 13 MPH			
MAX. SPEED . . . . . 70 MPH		TOILET . . . . . EQUIPPED	

ALCO 636 – 3600 H.P. LOCOMOTIVE

B.N. ENG. NUMBER	MAIN GEN.	ALTERNAT.	AUX. GEN.	TRACTION MOTOR	TOTAL WEIGHT	TRACTIVE EFFORT	DYNAMIC BRAKE	AIR BRAKE	AIR COMPRESS.	FUEL CAPY.	EXCITER		
4360-4365	GT-A9	NONE	12 KW	752-E6	393,460 LBS.	71,000 LBS.	POTENTIAL	26 L	3-CWDL	5000 GALS.	GY-27F1		
4366-4369	GT-H9EZ	NONE	12 KW	752-E6	393,460 LBS.	71,000 LBS.	POTENTIAL	26 L	3-CWDL	5000 GALS.	GY-27F1		

ALCO 636 – 3600 H.P. LOCOMOTIVE

ENGINE NUMBERS
4360-4369

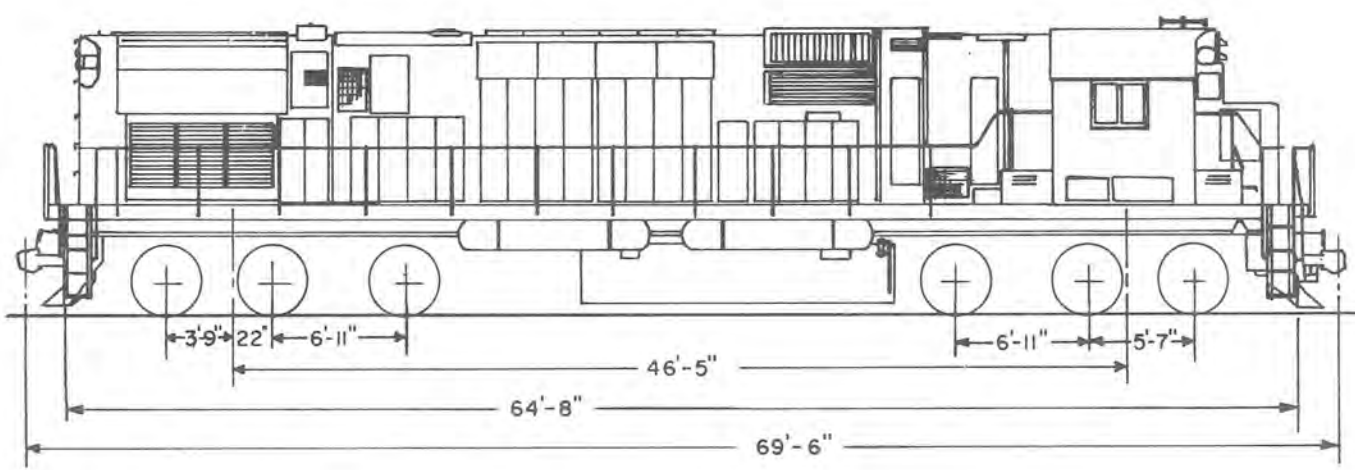

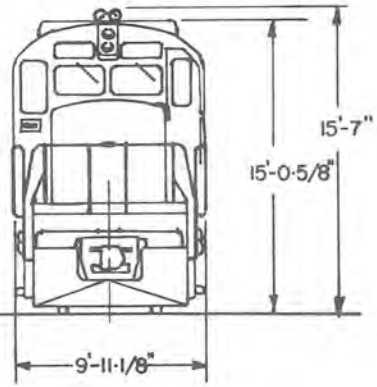

DIESEL ENGINE MODEL 16-251
TRANSITION . . . . . AUTOMATIC
M.U. CONTROL . . . . . EQUIPPED
SPEED RECORDER . CHI.PNEUMATIC
SAFETY CONTROL . . . FOOT PEDAL

CONT. RATED SPEED . . . . . 14.8 MPH
MAX. SPEED . . . . . 79 MPH

AIR BRAKE CYLS. . . . . .10"x10"
JOURNALS . .TKN.RB. . . . . 6½"x12"
GEAR RATIO 23:80
DRAFT GEAR M-381
COUPLER . .(AL.CONT. . . . . "E"

BATTERY
CAPY. . . . . 64V. 420 AMP. HR.
COOLING SYSTEM . . . . . 340 GALS.
LUB.OIL CAPY. . . . . 330 GALS.
SAND CAPY. . . . . 60 CU. FT.

TOILET . . . . . EQUIPPED

NOTES:

ELECTRIC TRAILER 1 AND 2 (SLUG)

ENGINE NUMBERS
ET-1, ET-2

BUILT BY BALDWIN IN 1940,42
AS DIESEL UNITS 650 & 652

ELECT. TRAILER NO. 1 CONVERTED FROM UNIT 652 AT SO. TACOMA 1959 - 1960.

ELECT TRAILER NO. 2 CONVERTED FROM UNIT 650 AT SO. TACOMA 1959 - 1960

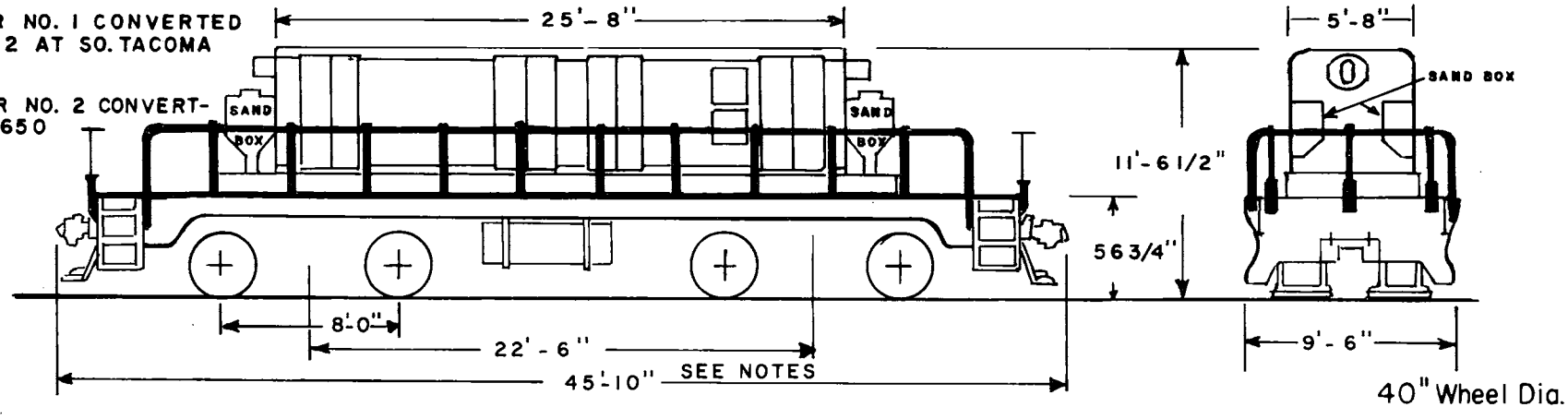

DIESEL ENGINE MODEL . . . . . NONE	AIR BRAKE CYLS. (4) . . . . . 9"x7"	BATTERY	NOTES:
TRANSITION . . . . . NONE	JOURNALS . . . FRIC. . . . . 6½"x12"	CAPY. . . . . NONE	TRAILER NO. 2, HAS AN OVERALL LENGTH OF 45'-0"
M.U. CONTROL . . . . NOT EQUIPPED	DRAFT GEAR W.H.M. A-22-XB	COOLING SYSTEM . . . . . NONE	TRAILER NO. 1 TOTAL WT. 175500
SPEED RECORDER . . . . . NONE	COUPLER TYPE . . . . . "E"	LUB.OIL CAPY. . . . . NONE	TRAILER NO. 1 LIGHT WT. 171900
SAFETY CONTROL . . . . . NONE	GEAR RATIO 15:62	SAND CAPY. . . . . 36 CU. FT.	TRAILER NO. 2 TOTAL WT. 175900
DESIGNED SPEED . . . . . 45 MPH	CONT. RATED SPEED	TRACTION MOTORS 4-D 27	TRAILER NO. 2 LIGHT WT. 172300
	AIR BRAKES . . . . . AB	CONTROL VOLTAGE . . . . . 74V.	
		MAIN RESERVOIR SIZE . . 22.5"x84"	

ELECTRIC TRAILER NO. 3 (SLUG)

ENGINE NUMBERS
ET-3

BUILT BY BALDWIN IN 1944
AS DIESEL UNIT 406

CONVERTED TO ELECT TRAILER
NO. 3 AT LIVINGSTON SHOP IN
1965

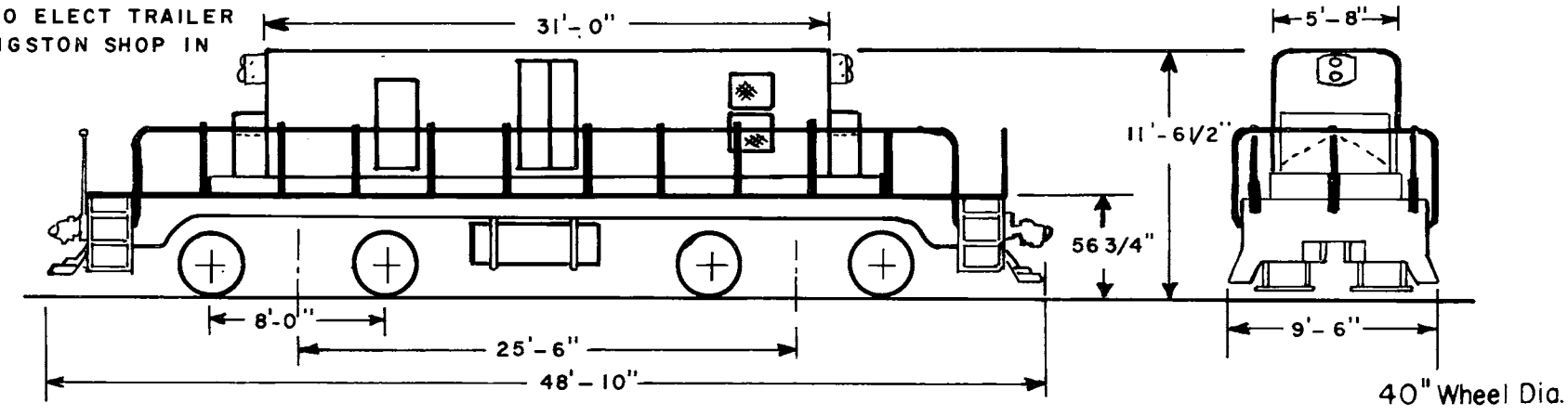

DIESEL ENGINE MODEL . . . . . NONE	AIR BRAKE CYLS. (4) . . . . . 10"x6"	BATTERY CAPY. . . . . NONE	NOTES:
TRANSITION . . . . . NONE	JOURNALS. . . FRIC. . . . . 6½"x12"	COOLING SYSTEM . . . . . NONE	TOTAL WEIGHT 207600 LBS.
M.U. CONTROL . . . . NOT EQUIPPED	DRAFT GEAR. W.H.M. . . . A-22-XB	LUB.OIL CAPY. . . . . NONE	LIGHT WEIGHT 204900 LBS.
SPEED RECORDER . . . . . NONE	COUPLER TYPE . . . . . "E"	SAND CAPY. . . . . 27 CU. FT.	
SAFETY CONTROL . . . . . NONE	GEAR RATIO 15:62	TRACTION MOTORS 4-D 27	
TRANSITION . . . . . NONE	CONT. RATED SPEED	CONTROL VOLTAGE . . . . . 74V.	
DESIGNED SPEED . . . . . 45 MPH	AIR BRAKES . . . . . AB	MAIN RESERVOIR SIZE . . 22.5"x84"	

HEATER CAR

UNIT NUMBERS
8

BUILT BY GN RY. IN 1948 AS BX.
CONVERTED TO HEATER CARS IN 1950 AND 1951.

FORMERLY GN. NO. 8

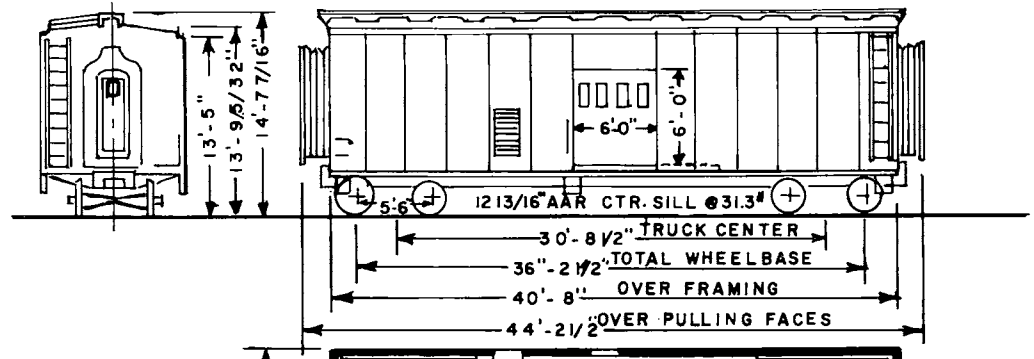

CATERPILLER ENGINE
D-311

LENGTH INSIDE 40'-6"
WIDTH INSIDE 9'-2"

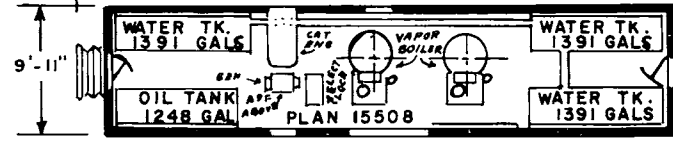

WATER TANK DIM.
(3)—10'-0"X6'-6"X3'-0"
OIL TANK DIM.
9'-0" X 6'-6" X 3'-0"

AFE 74886, 81213

WEIGHT . . . LOADED 138,400	TRUCKS . . . .CAST STL. ASF,A-3	AIR BRAKES . . . . . AB	LIGHTING . .18 KW. . . .DIESEL GEN.
FUEL OIL CAPY. . . . . 1248 GALS.	WHEELS . . . . .33" DIA. ROLLED STL.	AIR BRAKE CYLS. . . . . .10"x12"	BATTERIES . . . . . 64V.
BOILER WATER CAPY. . . 4173 GALS.	JOURNALS . . . .R.B. . . . . 5½"x10"	AIR COMPRESSOR . . . .ADF . . G.D.	COUPLERS . 6¼"x8". . . . . TYPE "E"
ST. GEN.	HANDBRAKE . .PEACOCK . . .800 LC	STEAM GEN. (2) OK-4740	DRAFT GEAR . . . .WEST NY-11G
CAPY. . . . . 4500# PER HR.EACH			

HEATER CAR

UNIT NUMBERS
16, 17, 18, 19

BUILT BY E.M.D. AS B-UNITS. CONVERTED TO HEATER CARS BY GN RY. IN 1967
FORMERLY GN NO. 16-19

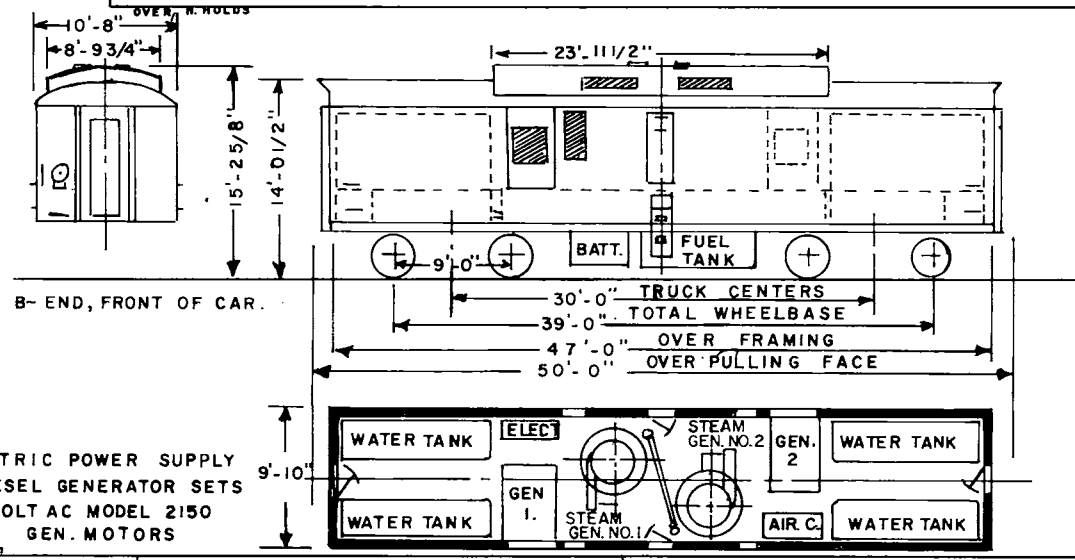

ELECTRIC POWER SUPPLY
2 DIESEL GENERATOR SETS
220 VOLT AC MODEL 2150
GEN. MOTORS

AFE 66-68, 67-6,

WEIGHT . . . .LOADED . . . . . 267,900 FUEL OIL CAPY. . . . . 1200 GALS. BOILER WATER CAPY. . 11780 GALS. ST.GEN. CAPY. . . . . 4500#LBS. P.H. EACH TRUCKS . . . . . CAST STEEL WHEELS . . . . . 40" DIA.	JOURNALS. HYATT R.B. . . 6½"x12" HANDBRAKE VERT. WHEEL ELLCON NAT'L	AIR BRAKES . . . . . 6" AIR BRAKE CYLS. 9x8" BUSHED TO 5½"x7" AIR COMPRESSOR . . . . .57TX-RAND STEAM GEN. (2) . . . . . OK-4744 BRAKE SHOES . . . . . .COMP.	BATTERIES . . . . . 32V.D.C. COUPLERS . . . . . TYPE "H" DRAFT GEAR . . . . . .M-380 N.C. CO. MU CONTROL . . . . . .EQUIPPED

RADIO CONTROL CAR 101

FORMERLY NP NO. RCU-1

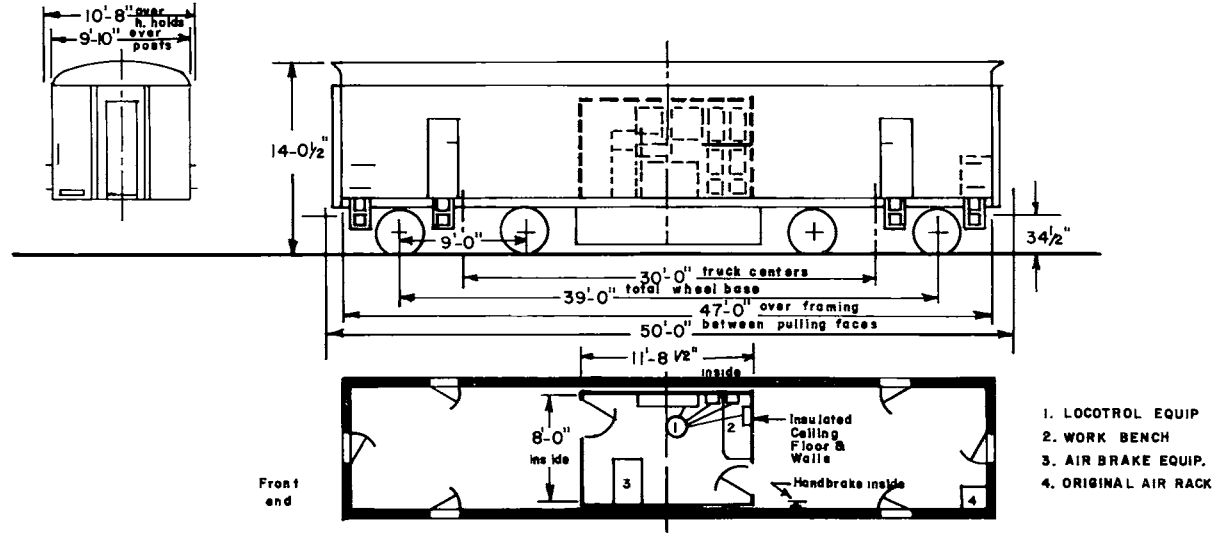

WEIGHT . . . . . 254600 LBS.	BRAKE RATIO 5.95:1	RCCIOI CONVERTED 1968 FROM N.P. 6010-C UNIT BUILT 1950	
JOURNALS . . . HYATT . . . 6½"x12"	N.Y.A.B. RACK . . . . . P/N 57822		
WHEELS . . . . . 40" DIA.	BRAKE SHOES . . . . . COMPOSITION		
DRAFT GEARS . N.M. M-380 RUBBER	ELECT. SYST. . . . . 74 V. DC		
AIR BRAKES 24RL	RADIATION EQUIP. . . MODEL 105SS		
AIR RESV. SIZE . . . . . 2-26 ½"x50"	RADIO EQUIP. . . . . MODEL X-1414A		
BRAKE CYLS. . . . . 8-6"	CAB HEATER . . . . . TYPE D-2-74-JL		

RADIO CONTROL CARS 103,104

FORMERLY GN CONTROL
CARS NO. 1 & 2

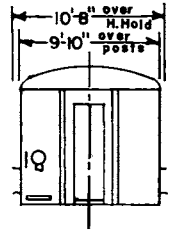

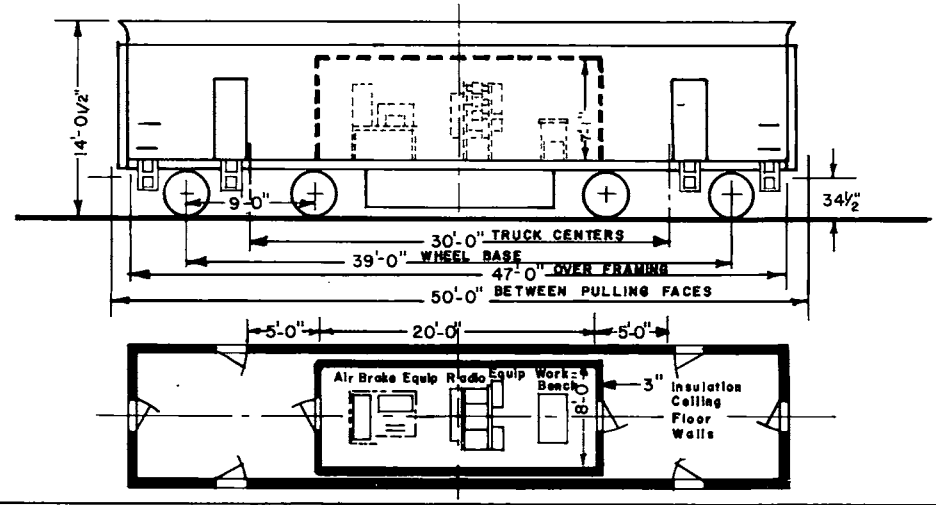

WEIGHT NOTE:
CAR 103-204,400 LBS.
CAR 104-208,000 "
AFE 67- 943

HANDBRAKE END
FRONT OF CAR

WEIGHT . . . . . SEE NOTE
JOURNALS. . . .HYATT . . . 6½"x12"
WHEELS . . . . . 40"
DRAFT GEARS. . M-380. . . . NC CO.
AIR BRAKES 26N
BRAKE CYLS. 9x8 BUSHED
TO 5½"x7"

BRAKE SHOES . . . . . .COMP.
ELECT.SYST.
74V DC T'LINE FROM TRAIL UNIT
RADIATION EQUIP. . . . . .MOD. 102
RADIO
EQUIP. . . R43MST . . MOTOROLA
CAB HEATER
CONVECTAIR . . . . . OGANTZ CO.

RCC 103 CONVERTED 1968 FROM
G.N. 438-C UNIT BUILT 1948
RCC 104 CONVERTED 1968 FROM
G.N. 446-B UNIT BUILT 1949
COUPLER . . . . . TYPE H
HANDBRAKE VERT. WHL.
ELLCON NAT'L

RADIO CONTROL CARS 102, 105-112

RCC 102 CONVERTED 1972 FROM
BN 749 UNIT BUILT 1951
RCC 107 CONVERTED 1973 FROM
BN 641 UNIT BUILT 1952
RCC 108 CONVERTED 1962 FROM
BN 661 UNIT BUILT 1950
RCC 109 CONVERTED 1972 FROM
BN 701 UNIT BUILT 1947
RCC 110 CONVERTED 1972 FROM
BN 629 UNIT BUILT 1950
RCC 111 CONVERTED 1972 FROM
BN 713 UNIT BUILT 1950
RCC 112 CONVERTED 1973 FROM
BN 671 UNIT BUILT 1950

WEIGHT NOTE:
AFE 71-597
RCU 105 240700 LBS.
RCU 106 246900 LBS.

AFE 72-127
RCC 102 253100 LBS.
RCC 108 253100 LBS.
RCC 109 244500 LBS.
RCC 110 240200 LBS.
RCC 111 237900 LBS.
RCC 112 241000 LBS.
AFE 72-1618
RCC 107 246000 LBS.

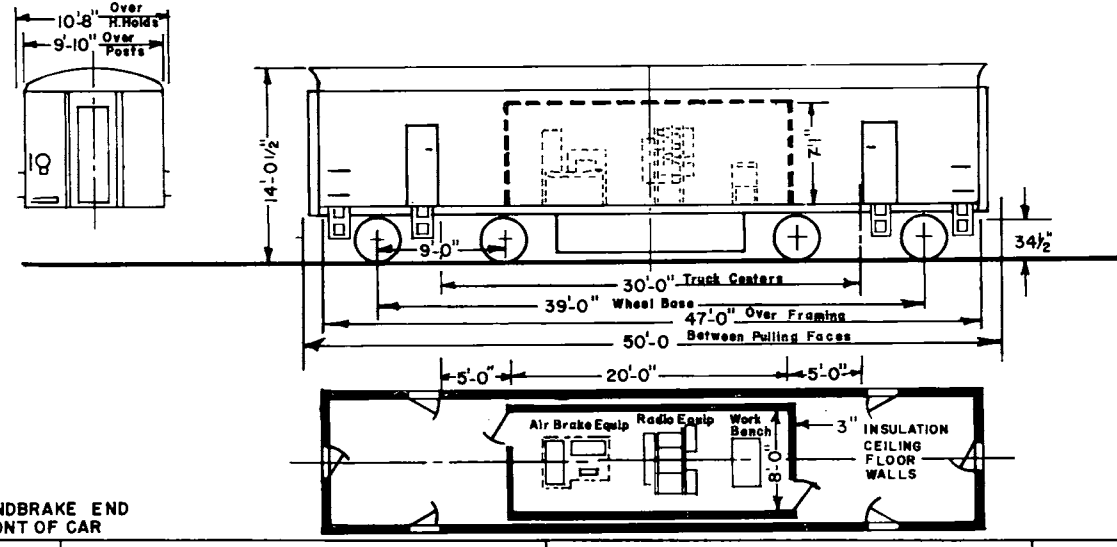

HANDBRAKE END
FRONT OF CAR

WEIGHT . . . . . SEE NOTE	BRAKE SHOES . . . . . COMP.	COUPLER . . . . . TYPE "H"	
JOURNALS . . . .HYATT . . . 6½"x12"	ELECT.	HANDBRAKE VERT. WHL.	
WHEELS . . . . . 40"	SYST. 74V-DC T'LINE TRAIL UNIT	ELLCON NAT'L	
DRAFT	RADIATION EQUIP. MOD.105SS		
GEARS . . . M-380 . . . . . NC CO.	RADIO		
AIR BRAKES 26N	EQUIP. . R43MST . . MOTOROLA		
AIR RESERV. SIZE	CAB		
BRAKE CYLS. 9x8 BUSHED	HEATER CONVECTAIR		
TO 5½"x7"	OGANTZ CO.		

AIR CAR 1

BUILT BY GN IN 1945—CAR 10020
CONV. REPEATER CAR IN 1964
RENUM. AIR CAR 3 IN 1969
" " " 1 IN 1970

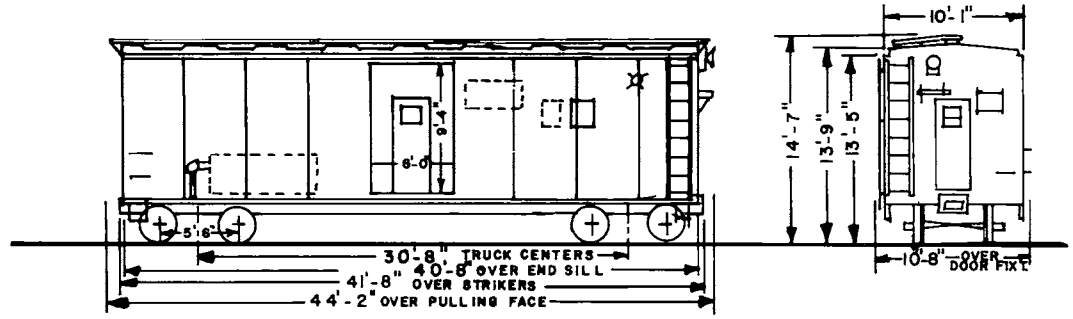

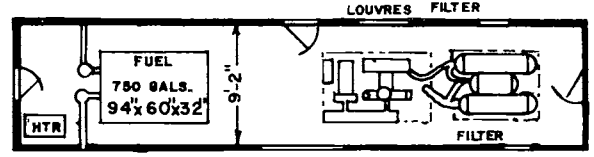

AFE 64-757

WEIGHT . . . . . .46200 LBS.	CUSHIONING . . . . . SPREM CO.	COUPLER . . . . . TYPE "E"	
JOURNALS FLAT BACK BR. 5½"x10"	COUPLER . . . . . 6¼"x8"	FUEL CAPY. . . . . 750 GALS.	
WHEELS . . . . . 33"	TRUCKS. . . . . .A3 . . . . . ASF		
DRAFT GEARS . . .ARR. . . . . STD.	SNUBBERS . . . . . .RIDE CONTROL		
AIR BRAKES . . . . . AB	HANDBRAKE . . .UNIVERSAL-POWER		
BRAKE CYLS. . . . . .10"x12"	COMPRESSOR . . . . . 3 CDC		
	ENGINE . . . . . .6 CYL.		

AIR CARS 2, 3

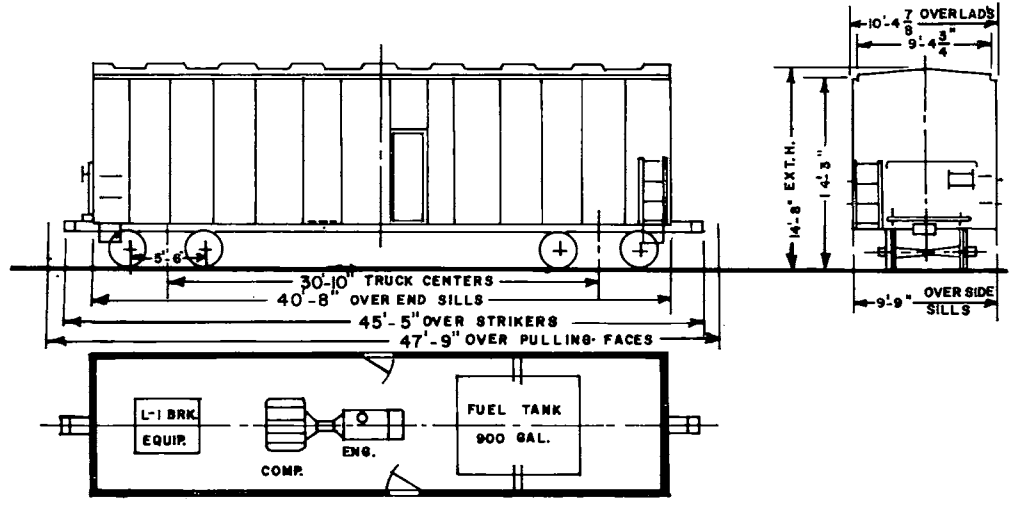

WEIGHT . . . . . .48700 LBS. JOURNALS. . . .R BRGS. . . . 5½"x10" WHEELS . . . . . 33" DRAFT GEARS . .AAR . . . . . STD. AIR BRAKES . . . . . AB BRAKE CYLS. . . . . .10"x12"	CUSHIONING . 10" FREIGHTMASTER COUPLER . .TYPE E . . . . . 6¼"x8" TRUCKS. . . . . A3 . . . . . ASF SNUBBERS . . . . . .RIDE CONTROL HANDBRAKE . . . . . VERT. AJAX FUEL CAPY. . . . . 930 GALS.	AIR CAR 2 CONVERTED FROM GN 5061 IN 1969, CAR BUILT 1955 AIR CAR 3 CONVERTED FROM GN 5172 in 1969, CAR BUILT 1955	COMPRESSOR. . . 3CDC . . . . WABCO ENGINE . . . . . .GM6030C . . .6 CYL.

AIR CARS 4 THRU 8

WEIGHT NOTE-
CAR 4 - 49000 LBS.
CAR 5 - 48500 LBS.
CAR 6 - 51200 LBS.
CAR 7 - 50200 LBS.
CAR 8 - 49600 LBS.

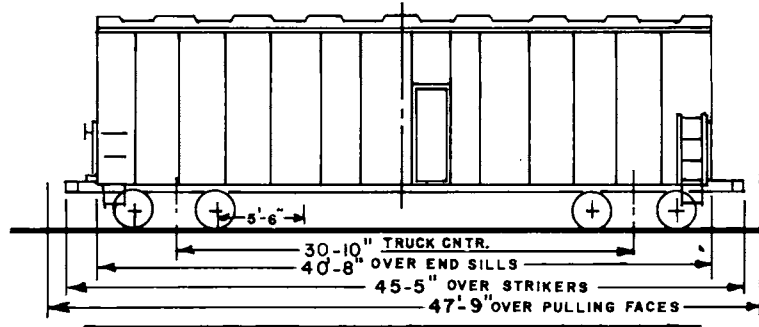

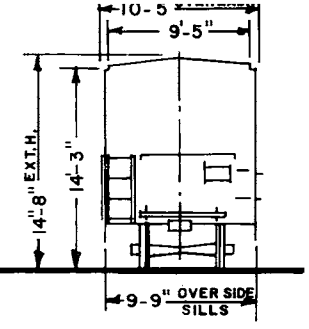

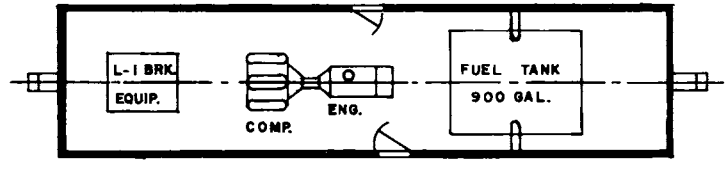

AFE 70-160

WEIGHT . . . . . SEE NOTE	CUSHIONING . 10" FREIGHTMASTER	AIR CAR 4 CONVERTED FROM GN5158	COMPRESSOR. . . 3CDC . . . . WABCO
JOURNALS. . . .R BRGS. . . . 5½"x10"	COUPLER . .TYPE E . . . . . 6¼"x8"	AIR CAR 5 CONVERTED FROM GN5188	ENGINE . . . . . GM 4030C. 4 CYL.
WHEELS . . . . . 33"	TRUCKS. . . . . A3 . . . . . ASF	AIR CAR 6 CONVERTED FROM GN5215	FUEL CAPY. . . . . 930 GALS.
DRAFT GEARS . . . .AAR . . . . STD.	SNUBBERS . . . . . .RIDE CONTROL	AIR CAR 7 CONVERTED FROM GN5342	
AIR BRAKES . . . . . AB	HANDBRAKE . . . . . VERT. AJAX	AIR CAR 8 CONVERTED FROM GN 5347	
BRAKE CYLS. . . . . .10"x12"		CARS BUILT 1955	
		CONVERTED 1970	

E.M.D. NW-2 – 1000 H.P. LOCOMOTIVE

B.N. ENG. NUMBER	MAIN GEN.	ALTERNAT.	AUX. GEN.	TRACTION MOTOR	TOTAL WEIGHT	TRACTIVE EFFORT	DYNAMIC BRAKE	AIR BRAKE	AIR COMPRESS.	FUEL CAPY.			
451-481	D-4	NONE	10 KW	D-27	251,200 LBS.	31,200 LBS.	NONE	14 EL	WXO	600 GALS.			
482-487	D-4	NONE	10 KW	D-27	251,200 LBS.	31,200 LBS.	NONE	6 DS	WXO	600 GALS.			
491-492	D-4	NONE	10 KW	D-27	249,300 LBS.	31,200 LBS.	NONE	6 BL	WXO	600 GALS.			
492-499	D-15	NONE	10 KW	D-27	249,300 LBS.	31,200 LBS.	NONE	6 BL	WXO	600 GALS.			
500-544	D-4	NONE	10 KW	D-27	249,986 LBS.	31,200 LBS.	NONE	6 ET	WXO	600 GALS.			
545	D-4	NONE	10 KW	D-27	249,986 LBS.	31,200 LBS.	NONE	6 BL	WXO	600 GALS.			
546-565	D-4	NONE	10 KW	D-27	249,986 LBS.	31-200 LBS.	NONE	6 BLQ	WXO	600 GALS.			
566-573	D-15	NONE	10 KW	D-27	249,986 LBS.	31,200 LBS.	NONE	6 BLQ	WXO	600 GALS.			
586	D-4-D	NONE	10 KW	D-27	249,986 LBS.	31,200 LBS.	NONE	6 BLQ	WXO	600 GALS.			
587	D-4-D	NONE	10 KW	D-27	249,986 LBS.	31,200 LBS.	NONE	6 BL	WXO	600 GALS.			
588-592	D-4-D	NONE	10 KW	D-27	249,986 LBS.	31,200 LBS.	NONE	14 EL	WXO	600 GALS.			
593-595	D-4-D	NONE	10 KW	D-27	249,986 LBS.	31,200 LBS.	NONE	14 EL	WXO	600 GALS.			
CS 150-153	D-4	NONE	10 KW	D-27	247,800 LBS.	31,200 LBS.	NONE	6 ET	WXO	600 GALS.			
FWD 605,606	D-4	NONE	10 KW	D-27	250,400 LBS.	31,200 LBS.	NONE	6 ET	WXO	600 GALS.			

FORT WORTH & DENVER — INDEX — FORT WORTH & DENVER

FW&D ENG. NUMBER	PREVIOUS NUMBER	SERIAL NUMBER	BLDR.	MODEL	AAR DESIG'N.	YEAR	PAGE
605	–	3923	EMD	NW-2	B-B	1946	2
606	–	3924	EMD	NW-2	B-B	1946	2
607	–	25043	EMD	SW-12	B-B	1959	22
608	–	25044	EMD	SW-12	B-B	1959	22
609	–	25045	EMD	SW-12	B-B	1959	22
610	–	25046	EMD	SW-12	B-B	1959	22
700	GN 600	11049	EMD	GP-7	B-B	1950	54
701	GN 601	11050	EMD	GP-7	B-B	1950	54
702	GN 602	11051	EMD	GP-7	B-B	1950	54
703	GN 603	11052	EMD	GP-7	B-B	1950	54

FW&D ENG. NUMBER	PREVIOUS NUMBER	SERIAL NUMBER	BLDR.	MODEL	AAR DESIG'N.	YEAR	PAGE
850	–	17121	EMD	SD-7	C-C	1953	74
851	–	17122	EMD	SD-7	C-C	1953	74
852	–	17123	EMD	SD-7	C-C	1953	74
853	–	17124	EMD	SD-7	C-C	1953	74
854	–	17125	EMD	SD-7	C-C	1953	74
855	–	17126	EMD	SD-7	C-C	1953	74
856	–	17127	EMD	SD-7	C-C	1953	74
857	–	17128	EMD	SD-7	C-C	1953	74
858	–	17921	EMD	SD-7	C-C	1953	74
859	–	17922	EMD	SD-7	C-C	1953	74

E.M.D. NW-2 — 1000 H.P. LOCOMOTIVE

ENGINE NUMBERS
451-463, 465-468, 470-573
586-595, CS150-153
FWD 605-606

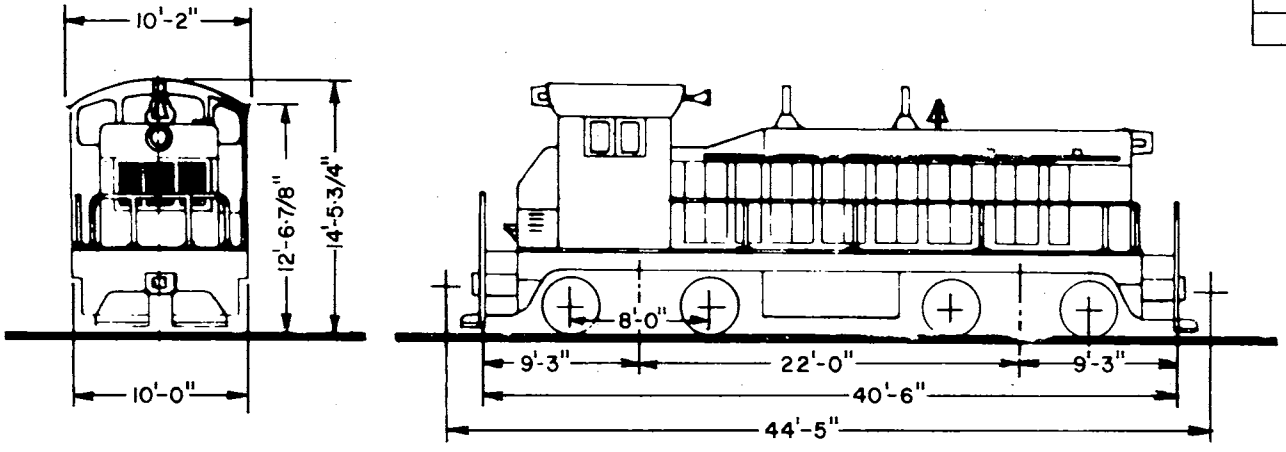

DIESEL ENGINE MODEL . . . 12-567A
TRANSITION . . . . . SELECTIVE
AUTO.FORWARD,
MANUAL BACKWARD
M.U. CONTROL . . . . . UNITS 496-499
UNITS 546-573
SPEED RECORDER . CHI.PNEUMATIC
UNITS 471, 480, 481
SAFETY CONTROL . . . FOOT PEDAL
MAX. SPEED . . . . . 50 MPH

AIR BRAKE CYLS. . . . . 11"x6"
UNITS 482-487 . . . . . 10"x6"
UNITS 588-592 . . . . . .10"x10"
JOURNALS . . . FRIC. . . . . 6½"x12"
*UNITS 450-499 .RB. . .6-7/8"x12"
*UNITS 568-586 .RB. . .6-7/8"x12"
GEAR RATIO 15:62
UNITS 546,550,558-562
564,568-570 . . . . . .12:65
DRAFT GEAR M-375
UNITS 500-516, 586-595 . . . . M-17A

BATTERY CAPY. . 64V. 426 AMP. HR.
COOLING SYSTEM . . . . . 200 GALS.
LUB.OIL CAPY. . . . . 125 GALS.
UNITS 502-516 . . . . . 100 GALS.
UNITS 546-573 . . . . . 165 GALS.
SAND CAPY. . . . . 28 CU. FT.

TOILET . . . . . NOT EQUIPPED

NOTES:

UNIT 487 HAS BEEN INCREASED TO 1200 H.P. ALSO EQUIPPED WITH MODIFIED BRAKE RIGGING AND 4 COMPOSITION BRAKE SHOES PER TRUCK.

*FRIC. ON A ROLLER BRG. INNER RACE

E.M.D. NW-5 – 1000 H. P. LOCOMOTIVE

B.N. ENG. NUMBER	MAIN GEN.	ALTERNAT.	AUX. GEN.	TRACTION MOTOR	TOTAL WEIGHT	TRACTIVE EFFORT	DYNAMIC BRAKE	AIR BRAKE	AIR COMPRESS.	FUEL CAPY.			
986-995	D-4	NONE	10 KW	D-27	216,920 LBS.	31,200 LBS.	NONE	6 DSC	WXO	1410 GALS.			

E.M.D. NW-5 — 1000 H. P. LOCOMOTIVE

ENGINE NUMBERS
986-995

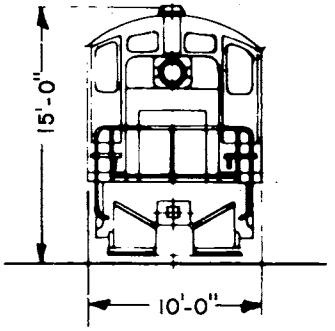

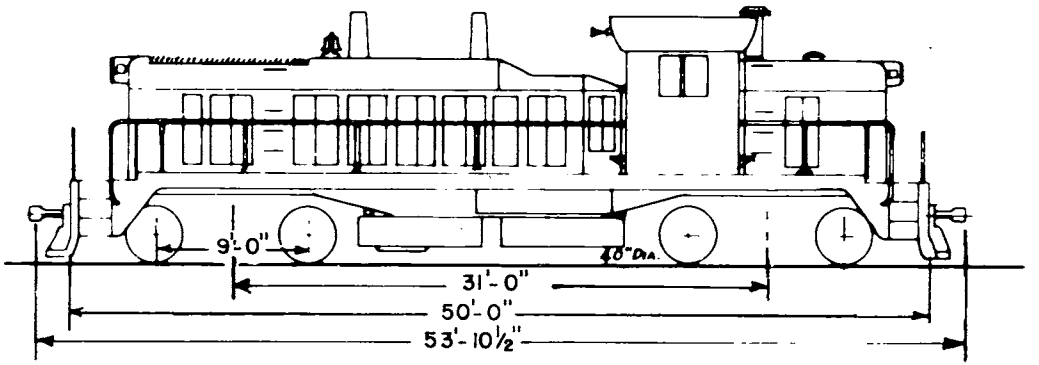

DIESEL ENGINE MODEL 12-567B	AIR BRAKE CYLS. . . . . 9"x8"	BATTERY	NOTES:
TRANSITION . . . . . SELECTIVE	JOURNALS. .HY. RB. . . . 6-7/8"x12"	CAPY. . . . . 64V. 426 AMP. HR.	
M.U. CONTROL . . . . . EQUIPPED	GEAR RATIO 15:62	COOLING SYSTEM . . . . . 225 GALS.	
SPEED RECORDER . CHI.PNEUMATIC	DRAFT GEAR M-350A	LUB. OIL CAPY. . . . . 165 GALS.	
SAFETY CONTROL . . .FOOT PEDAL	COUPLER . . . . . "E"	SAND CAPY. . . . . 28 CU. FT.	
MAX. SPEED . . . . . 66 MPH		TOILET . . . . . NOT EQUIPPED	

E.M.D. NW-12 – 1200 H.P. LOCOMOTIVE

B.N. ENG. NUMBER	MAIN GEN.	ALTERNAT.	AUX. GEN.	TRACTION MOTOR	TOTAL WEIGHT	TRACTIVE EFFORT	DYNAMIC BRAKE	AIR BRAKE	AIR COMPRESS.	FUEL CAPY.			
1	D-4	NONE	10 KW	D-27	251,200 LBS.	31,200 LBS.	NONE	26 N	WBO	900 GALS.			
5	D-4	NONE	10 KW	D-27	251,200 LBS.	31,200 LBS.	NONE	26 N	WBO	900 GALS.			
14	D-4	NONE	10 KW	D-27	251,200 LBS.	31,200 LBS.	NONE	26 N	WBO	900 GALS.			
19	D-4	NONE	10 KW	D-27	251,200 LBS.	31,200 LBS.	NONE	26 N	WBO	900 GALS.			

E.M.D. NW-12 – 1200 H.P. LOCOMOTIVE

ENGINE NUMBERS
1-20

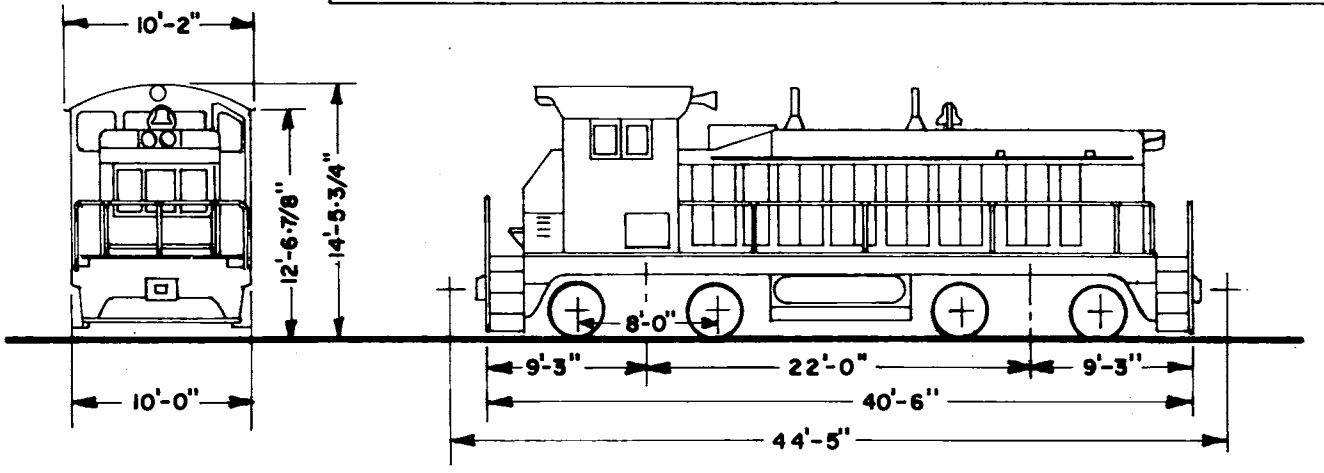

DIESEL ENGINE MODEL . . 12-645 BC	AIR BRAKE CYLS. 11"x6"	BATTERY	NOTES:
TRANSITION . . . . . SELECTIVE	JOURNALS . . . TKN . . . . . 7"x12"	CAPY. . . . . 64V. 420 AMP. HR.	
M.U. CONTROL . . . . . NONE	GEAR RATIO 15:62	COOLING SYSTEM . . . . . 200 GALS.	
SPEED RECORDER . . . . . NONE	DRAFT GEAR MS-485-5A	LUB. OIL. CAPY. . . . . 165 GALS.	
SAFETY CONTROL . . . FOOT PEDAL	COUPLER . . . . . "E"	SAND CAPY. . . . . 28 CU. FT.	
MAX. SPEED . . . . . 50 MPH		TOILET . . . . . NOT EQUIPPED	

E.M.D. SW-1 – 600 H. P. LOCOMOTIVE

B.N. ENG. NUMBER	MAIN GEN.	ALTERNAT.	AUX. GEN.	TRACTION MOTOR	TOTAL WEIGHT	TRACTIVE EFFORT	DYNAMIC BRAKE	AIR BRAKE	AIR COMPRESS.	FUEL CAPY.			
80-82	D-15	NONE	10 KW	D-27	200,000 LBS.	24,000 LBS.	NONE	6 BLC	WXO	600 GALS.			
83	D-15	NONE	10 KW	D-27	200,000 LBS.	24,000 LBS.	NONE	6 BL	WXO	600 GALS.			
87-97	D-4	NONE	10 KW	D-27	198,400 LBS.	24,000 LBS.	NONE	6 ET	WXO	600 GALS.			
102	D-4	NONE	10 KW	D-27	232,500 LBS.	24,000 LBS.	NONE	6 BL	WXO	600 GALS.			

E.M.D. SW-1 – 600 H. P. LOCOMOTIVE

ENGINE NUMBERS
80-97, 102

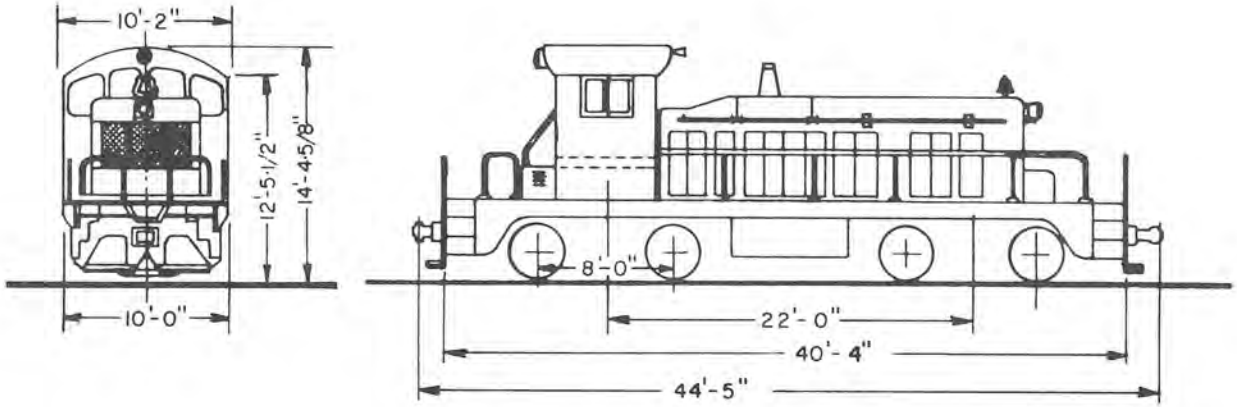

DIESEL ENGINE MODEL . . . . . 6-567 TRANSITION . . . . . NONE UNITS 80-83 . . . . . AUTOMATIC M.U. CONTROL . . UNITS 80-82 ONLY SAFETY CONTROL . . . FOOT PEDAL (EXCEPT 102) MAX. SPEED . . . . . 50 MPH	AIR BRAKE CYLS. . . . . 10"x6" JOURNALS . . . FRIC. . . . . 6½"x12" UNITS 80-83 HY. RB. . . . . 6-7/8"x12" GEAR RATIO . . . . . 15:62 DRAFT GEAR . . . . . M-17A UNITS 80-83 . . . . . M-375 COUPLER . . . . . "E"	BATTERY CAPY. . . . . 64V. 284 AMP. HR. COOLING SYSTEM . . . . . 135 GALS. LUB. OIL CAPY. . . . . 75 GALS. SAND CAPY. . . . . 28 CU. FT. TOILET . . . . . NOT EQUIPPED	NOTES:

E.M.D. SW-7 — 1200 H. P. LOCOMOTIVE

B.N. ENG. NUMBER	MAIN GEN.	ALTERNAT.	AUX. GEN.	TRACTION MOTOR	TOTAL WEIGHT	TRACTIVE EFFORT	DYNAMIC BRAKE	AIR BRAKE	AIR COMPRESS.	FUEL CAPY.			
108-134	D-15-A	NONE	10 KW	D-27	249,420 LBS.	35,600 LBS.	NONE	6 BL	WXO	600 GALS.			
135-142	D-15-A	NONE	10 KW	D-27	247,860 LBS.	35,600 LBS.	NONE	6 BLC	WXO	600 GALS.			
143-145	D-15-A	NONE	10 KW	D-27	254,860 LBS.	35,600 LBS.	NONE	6 BLC	WXO	600 GALS.			
CS 154	D-15	NONE	10 KW	D-27	274,325 LBS.	35,600 LBS.	NONE	6 BL	WXO	600 GALS.			

E.M.D. SW-7 — 1200 H. P. LOCOMOTIVE

ENGINE NUMBERS
108-145, CS154

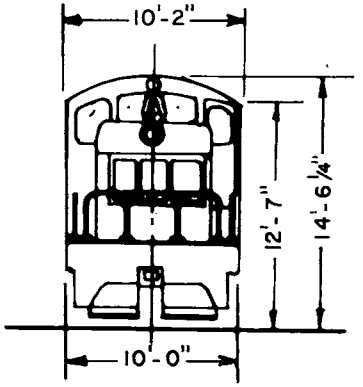

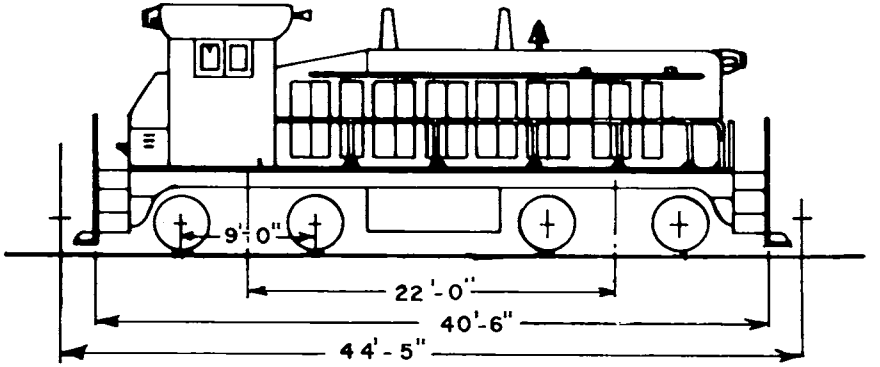

DIESEL ENGINE MODEL 12-567A
TRANSITION . . . . . SELECTIVE
AUTO FORWARD,
MANUAL BACKWARD
M.U. CONTROL . . . . . NONE
SPEED RECORDER . . . . . NONE
SAFETY CONTROL . . . FOOT PEDAL
MAX. SPEED . . . . . 50 MPH
UNITS 135, 136, 143, 145 . . 66 MPH

AIR BRAKE CYLS. . . . . 11"x6"
JOURNALS . . . FRIC. . . . . 6½"x12"
UNITS 135-145 HY.RB. . 6-7/8"x12"
GEAR RATIO 15:62
UNITS 115, 127, 121,
129, 131, 134 . . . . . 12:65
DRAFT GEAR M-375
COUPLER . . . . . "E"

BATTERY
CAPY. . . . . 64V, 426 AMP. HR.
COOLING SYSTEM . . . . . 223 GALS.
LUB. OIL CAPY. . . . . 165 GALS.
SAND CAPY. . . . . 28 CU. FT.

TOILET . . . . . NOT EQUIPPED

NOTES:

E.M.D. SW-8 – 800 H. P. LOCOMOTIVE

B.N. ENG. NUMBER	MAIN GEN.	ALTERNAT.	AUX. GEN.	TRACTION MOTOR	TOTAL WEIGHT	TRACTIVE EFFORT	DYNAMIC BRAKE	AIR BRAKE	AIR COMPRESS.	FUEL CAPY.			
87-97	D-15	NONE	10 KW	D-27	232-500 LBS.	28,000 LBS.	NONE	6 BL	WXO	600 GALS.			
101	D-4	NONE	10 KW	D-27	232-500 LBS.	28,000 LBS.	NONE	14 EL	WXO	600 GALS.			

E.M.D. SW-8 — 800 H. P. LOCOMOTIVE

ENGINE NUMBERS
98, 99, 101

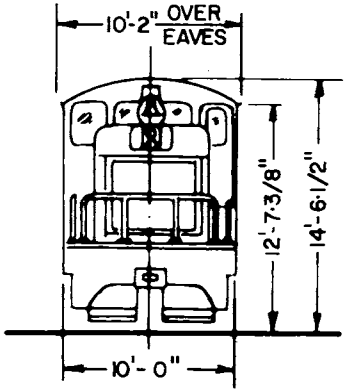

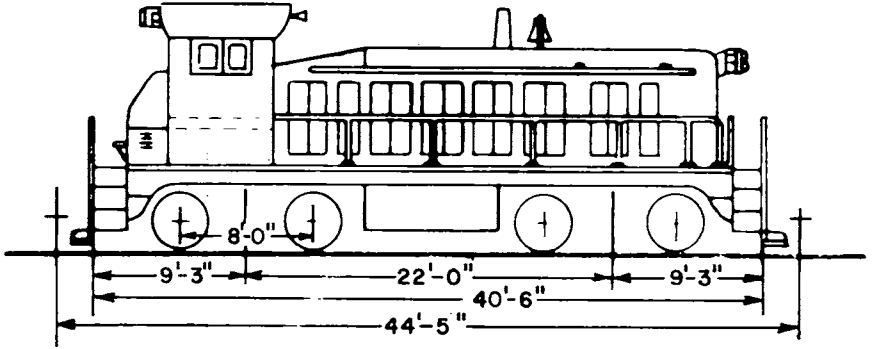

DIESEL ENGINE MODEL 8-567B	AIR BRAKE CYLS. . . . . 10"x6"	BATTERY	NOTES:
TRANSITION . . . . . SELECTIVE	UNIT 101 . . . . . 11"x6"	CAPY. . . . . 64V. 284 AMP. HR.	
M.U. CONTROL . . . . . NONE	JOURNAL . . HY. RB. . . . .6-7/8"x12"	COOLING SYSTEM . . . . . 190 GALS.	
SPEED RECORDER . . . . . NONE	GEAR RATIO 15:62	LUB. OIL CAPY. . . . . 145 GALS.	
SAFETY CONTROL . . .FOOT PEDAL	DRAFT GEAR M-375	SAND CAPY. . . . . 28 CU. FT.	
	COUPLER . . . . . "E"		
MAX. SPEED . . . . . 50 MPH		TOILET . . . . . NOT EQUIPPED	

E.M.D. SW-900 — 900 H. P. LOCOMOTIVE

B.N. ENG. NUMBER	MAIN GEN.	ALTERNAT.	AUX. GEN.	TRACTION MOTOR	TOTAL WEIGHT	TRACTIVE EFFORT	DYNAMIC BRAKE	AIR BRAKE	AIR COMPRESS.	FUEL CAPY.			
100	WEST 486	NONE	10 KW	D-27	232,500 LBS.	28,000 LBS.	NONE	6-BL	WXO	600 GALS.			

E.M.D. SW-900 – 900 H. P. LOCOMOTIVE

ENGINE NUMBERS
100

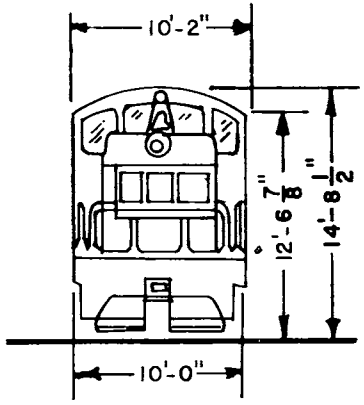

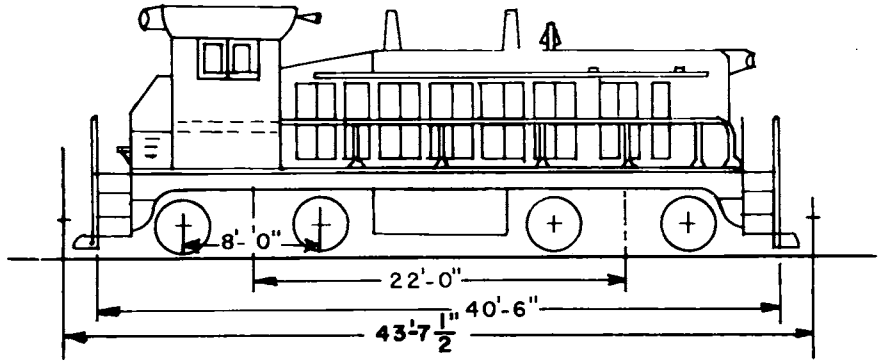

DIESEL ENGINE MODEL 8-567C	AIR BRAKE CYLS. . . . . .10"x10"	BATTERY	NOTES:
TRANSITION . . . . . AUTOMATIC	JOURNALS. . . .FRIC. . . . . 6½"x12"	CAPY. . . . . 64V. 426 AMP. HR.	
M.U. CONTROL . . . . . NONE	GEAR RATIO 15.62	COOLING SYSTEM . . . . . 120 GALS.	
SPEED RECORDER . . . . . NONE	DRAFT GEAR M-375	LUB. OIL CAPY. . . . . 130 GALS.	
SAFETY CONTROL . . .FOOT PEDAL	COUPLER . . . . . "E"	SAND CAPY. . . . . 35 CU. FT.	
MAX. SPEED . . . . . 50 MPH		TOILET . . . . . NOT EQUIPPED	

E.M.D. SW-9 – 1200 H. P. LOCOMOTIVE

B.N. ENG. NUMBER	MAIN GEN.	ALTERNAT.	AUX. GEN.	TRACTION MOTOR	TOTAL WEIGHT	TRACTIVE EFFORT	DYNAMIC BRAKE	AIR BRAKE	AIR COMPRESS.	FUEL CAPY.			
146-148	D-15	NONE	10 KW	D-27	249,720 LBS.	35,600 LBS.	NONE	6 SL	WXO	600 GALS.			
149-155	D-15	NONE	10 KW	D-27	249,720 LBS.	35,600 LBS.	NONE	6 BLC	WXO	600 GALS.			
156-169	D-15-C	NONE	10 KW	D-27	249,720 LBS.	35,600 LBS.	NONE	6 BL	WXO	600 GALS.			
160-161	D-15-C	NONE	10 KW	D-27	249,720 LBS.	35,600 LBS.	NONE	6 BL	WXO	600 GALS.			
167-169	D-15-C	NONE	10 KW	D-27	249,720 LBS.	35,600 LBS.	NONE	6 BL	WXO	600 GALS.			

E.M.D. SW-9 – 1200 H. P. LOCOMOTIVE

ENGINE NUMBERS
146-161, 167, 169

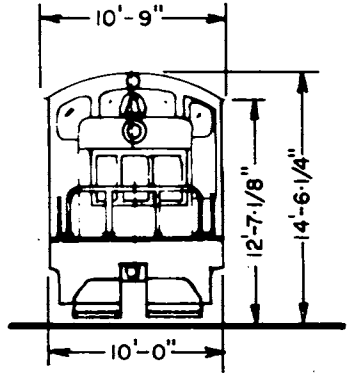

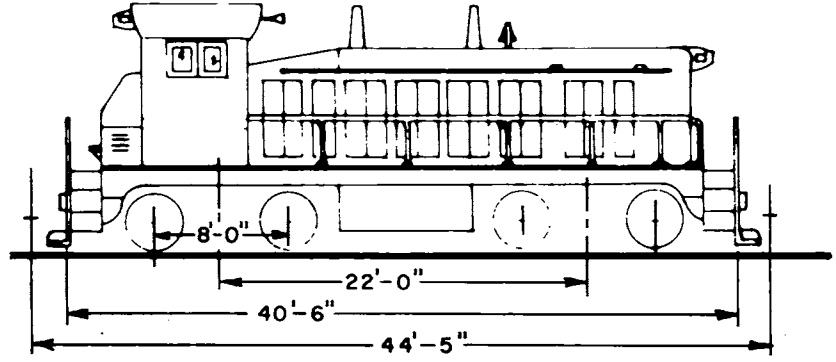

DIESEL ENGINE MODEL 12-567B
TRANSITION . . . . . SELECTIVE
AUTO. FORWARD, MANUAL BACKWARD
M.U. CONTROL UNITS 149-155 ONLY
SPEED REORDER . . . . . NONE
SAFETY CONTROL . . . FOOT PEDAL
MAX. SPEED . . . . . 50 MPH
UNITS 149-155 . . . . . 66 MPH

AIR BRAKE CYLS. . . . . 11"x6"
UNITS 149-155 . . . . . 9"x8"
JOURNALS . . . FRIC. . . . . 6½"x12"
UNITS 146-155 HY.RB. .6-7/8"x12"
GEAR RATIO 15:62
DRAFT GEAR M-375
COUPLER . . . . . "E"
UNITS 143-144,
153-155 . ALIGN. CONTROL

BATTERY
CAPY. . . . . 64V. 284 AMP. HR.
UNITS 167-169 . 64V. 426 AMP. HR.
COOLING SYSTEM . . . . . 233 GALS.
LUB.OIL CAPY. . . . . 165 GALS.
SAND CAPY. . . . . 28 CU. FT.

TOILET . . . . . NOT EQUIPPED

NOTES:

E.M.D. SW-1000 — 1000 H.P. LOCOMOTIVE

B.N. ENG. NUMBER	MAIN GEN.	ALTERNAT.	AUX. GEN.	TRACTION MOTOR	TOTAL WEIGHT	TRACTIVE EFFORT	DYNAMIC BRAKE	AIR BRAKE	AIR COMPRESS.	FUEL CAPY.			
574-585	D-32R	NONE	10 KW	D-27	249-986 LBS.	31,200 LBS.	NONE	26 L	WBO	1100 GALS.			
375-394	D-32R	NONE	10 KW	D-27	248,140 LBS.	31,200 LBS.	NONE	26 L	WBO	1100 GALS.			
427-449	D-32R	NONE	10 KW	D-27	246,300 LBS.	31,200 LBS.	NONE	26 L	WBO	1100 GALS.			

E.M.D. SW-1000 — 1000 H.P. LOCOMOTIVE

ENGINE NUMBERS
375-394, 427-449, 574-585

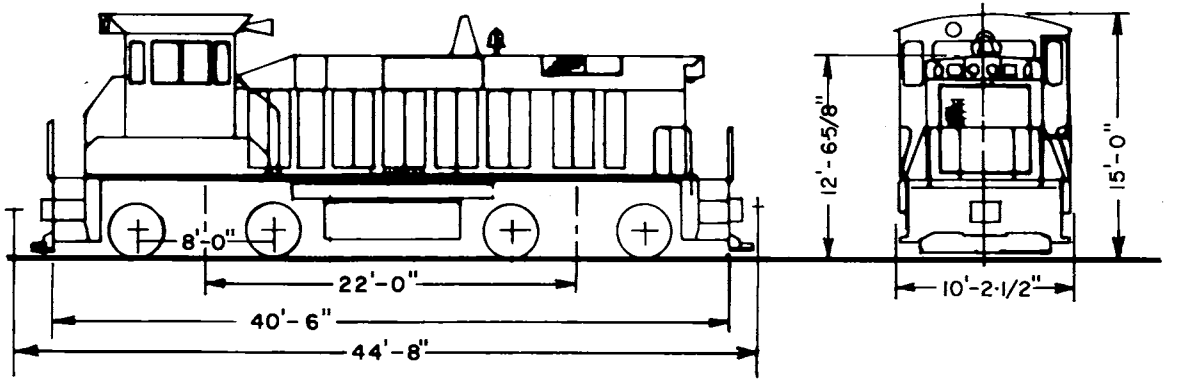

DIESEL ENGINE MODEL . . . . .8-645E TRANSITION . . . . . SELECTIVE M.U. CONTROL . . . . . EQUIPPED UNITS 427-434, 375-389 . . . . NOT EQUIPPED SPEED RECORDER . . . . . NONE SAFETY CONTROL . . .FOOT PEDAL MAX. SPEED . . . . . 50 MPH	AIR BRAKE CYLS. . . . . 9"x8" UNITS 375-394, 427-449 . . . . . .10"-6" JOURNALS . . . HY. RB. . . . 6½"x12" UNITS 375-394, 427-449 HY.RB. . . . 7"x12" GEAR RATIO . . . . . .15.62 DRAFT GEAR . . . . . MS-485-6A COUPLER . . . . . ."E"	BATTERY CAPY. . . . . 64V. 426 AMP. HR. COOLING SYSTEM . . . . . 190 GALS. LUB.OIL CAPY. . . . . 135 GALS. SAND CAPY. . . . . 30 CU. FT. TOILET . . . . . NOT EQUIPPED	NOTES:

EMD SW-12 – 1200 H.P. LOCOMOTIVE

B.N. ENG. NUMBER	MAIN GEN.	ALTERNAT.	AUX. GEN.	TRACTION MOTOR	TOTAL WEIGHT	TRACTIVE EFFORT	DYNAMIC BRAKE	AIR BRAKE	AIR COMPRESS.	FUEL CAPY.			
106	D-4	NONE	10 KW	D-27	249,420 LBS.	35,000 LBS.	NONE	6-BL	WXO	600 GALS.			

EMD SW-12 — 1200 H.P. LOCOMOTIVE

ENGINE NUMBERS
106

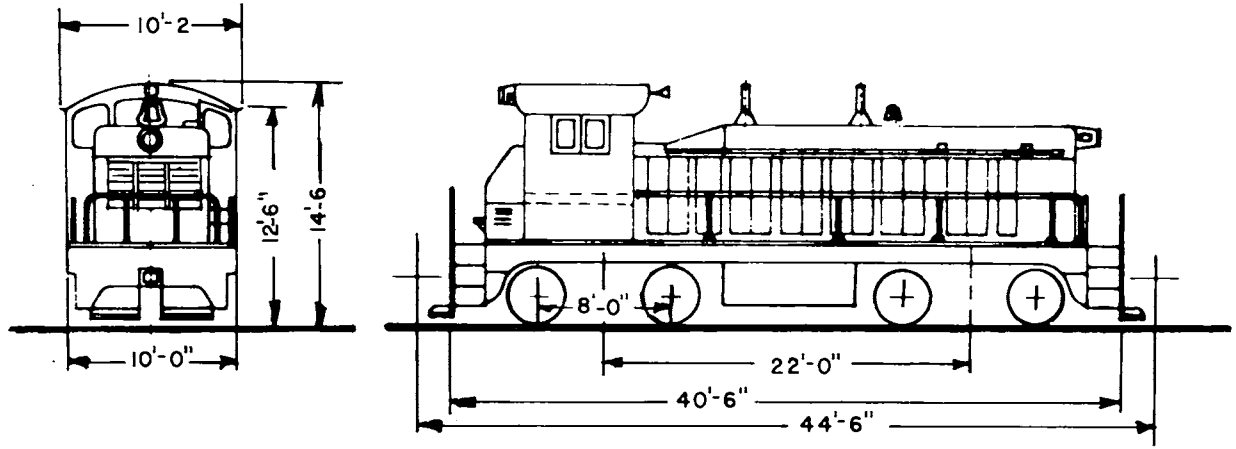

DIESEL ENGINE MODEL . . . . 12-567B TRANSITION . . . . . SELECTIVE M.U. CONTROL . . . . . NONE SPEED RECORDER . . . . . NONE SAFETY CONTROL . . .FOOT PEDAL MAX. SPEED . . . . . 50 MPH	AIR BRAKE CYLS. . . . . 11"x6" JOURNALS . . . HY. RB. . .6-7/8"x12" GEAR RATIO . . . . . .15.62 DRAFT GEAR . . . . . M-375 COUPLER . . . . . ."E"	BATTERY CAPY. . . . . 64V. 284 AMP. HR. COOLING SYSTEM . . . . . 190 GALS LUB.OIL CAPY. . . . . 145 GALS. SAND CAPY. . . . . 28 CU. FT. TOILET . . . . . NOT EQUIPPED	NOTES:

E.M.D. SW-12 – 1200 H. P. LOCOMOTIVE

B.N. ENG. NUMBER	MAIN GEN.	ALTERNAT.	AUX. GEN.	TRACTION MOTOR	TOTAL WEIGHT	TRACTIVE EFFORT	DYNAMIC BRAKE	AIR BRAKE	AIR COMPRESS.	FUEL CAPY.			
162-166	D-15	NONE	10 KW	D-27	249,720 LBS.	35,600 LBS.	NONE	6 BLC	WXO	935 GALS.			
170-191	D-15-C	NONE	10 KW	D-27	249,720 LBS.	35,600 LBS.	NONE	6 BL	WXO	600 GALS.			
192-207	D-15-C	NONE	10 KW	D-27	249,720 LBS.	35,600 LBS.	NONE	6 BLC	WXO	600 GALS.			
208-238	D-15-C	NONE	10 KW	D-27	249,720 LBS.	35,600 LBS.	NONE	6 BL	WXO	600 GALS.			
239-246	D-8	NONE	10 KW	D-27	249,720 LBS.	35,600 LBS.	NONE	26 L	WXO	600 GALS.			
247-250	D-25-C	NONE	10 KW	D-27	249,720 LBS.	35,600 LBS.	NONE	26 L	WXO	600 GALS.			
CS 156-160	D-15	NONE	10 KW	D-27	245,660 LBS.	35,600 LBS.	NONE	6 BL	WBO	600 GALS.			
FWD 607-610	D-15	NONE	10 KW	D-27	245,660 LBS.	35,600 LBS.	NONE	6 BL	WXO	600 GALS.			

E.M.D. SW-12 — 1200 H. P. LOCOMOTIVE

ENGINE NUMBERS
162-166, 170-250, CS156-160
FWD 607-610

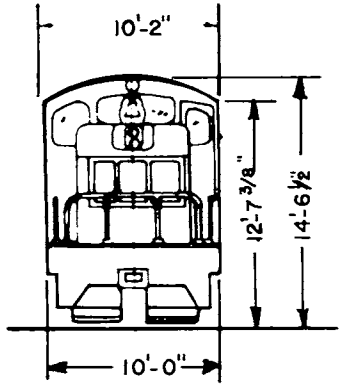

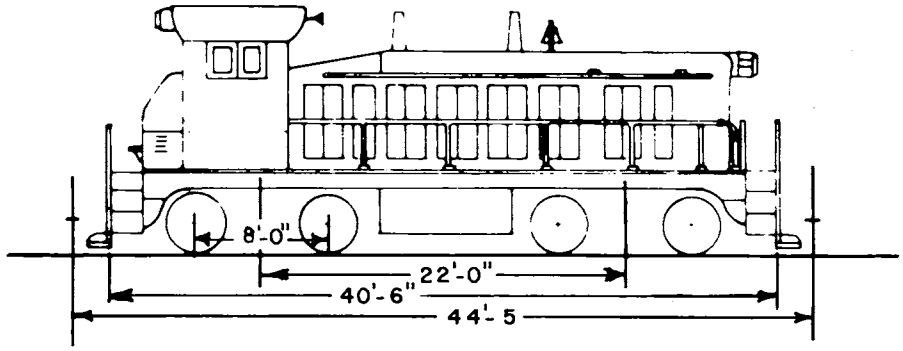

DIESEL ENGINE MODEL 12-567C
TRANSITION . . . . . AUTOMATIC
M.U. CONTROL
UNITS 162-166, 239-250
192-199, 205-207. EQUIPPED
SAFETY RECORDER . . . . . NONE
SAFETY CONTROL . . . FOOT PEDAL

MAX. SPEED . . . . . 50 MPH
UNITS 162-166 . . . . . 66 MPH

AIR BRAKE CYLS. . . . . 11"x6"
UNITS 162-166 . . . . . 9"x8"
JOURNALS . . . FRIC. . . . . 6½"x12"
UNITS 162-166, 170-250
HY. RB. . . . . 6-7/8"x12"
GEAR RATIO 15:62
DRAFT GEAR M-375
COUPLER . . . . . "E"

BATTERY
CAPY. . . . . 64V. 289 AMP. HR.
COOLING SYSTEM . . . . . 230 GALS.
LUB.OIL CAPY. . . . . 165 GALS.
SAND CAPY. . . . . 24 CU. FT.

TOILET . . . . . NOT EQUIPPED

NOTES:
DE 178-180 WIRED TO OPERATE WITH ET1-ET3.

E.M.D. SW-1500 — 1500 H. P. LOCOMOTIVE

B.N. ENG. NUMBER	MAIN GEN.	ALTERNAT.	AUX. GEN.	TRACTION MOTOR	TOTAL WEIGHT	TRACTIVE EFFORT	DYNAMIC BRAKE	AIR BRAKE	AIR COMPRESS.	FUEL CAPY.			
300-309	D-32	NONE	10 KW	D-27	262,100 LBS.	45,000 LBS.	NONE	26-L	WBO	1100 GALS.			
310-324	D-32	NONE	18 KW	D-77	255,160 LBS.	45,000 LBS.	NONE	26-L	WBO	1100 GALS.			

E.M.D. SW-1500 — 1500 H. P. LOCOMOTIVE

ENGINE NUMBERS
300-324

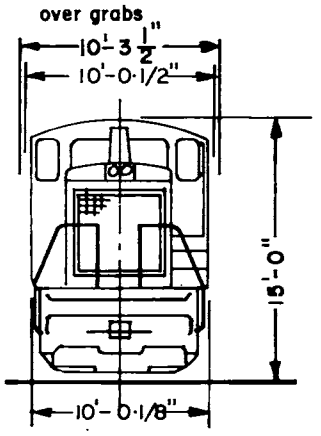

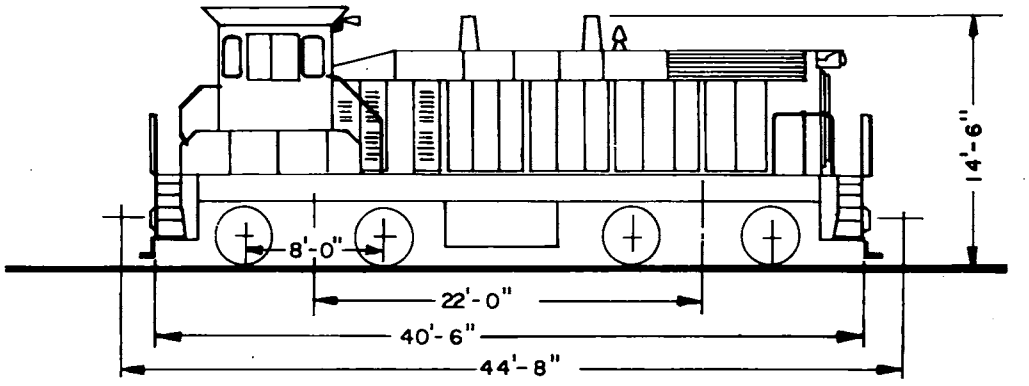

DIESEL ENGINE MODEL 12-645E	AIR BRAKE CYLS . . . . . 9"x8"	BATTERY	**NOTES:**
TRANSITION . . . . . AUTOMATIC	UNITS 310-324 . . . . . 10"x6"	CAPY. . . . . 64V. 420 AMP. HR.	UNITS 310-324 HAVE SIDE FRAME MOUNTED HANDRAILS IN LIEU OF HOOD MOUNTED HAND RAILS.
M.U. CONTROL . . . . . EQUIPPED	JOURNALS . . . HY. RB. . . . 6½"x12"	COOLING SYSTEM . . . . . 230 GALS	
SPEED RECORDER . . ELECT. BARCO	UNITS 310-324 TKN . . . . . 7"x12"	LUB OIL CAPY. . . . . 165 GALS.	
UNIT 310-324 . . . . . MECH. BARCO	GEAR RATIO 15:62	SAND CAPY. . . . . .30 CU. FT.	
SAFETY CONTROL . . . FOOT PEDAL	DRAFT GEAR MS-485-6A	DUEL CONTROL . . . . UNITS 300-309	
	COUPLER . . . . . "E"		
MAX. SPEED . . . . . 50 MPH		TOILET . . . . . NOT EQUIPPED	
UNITS 300-309 . . . . . 66 MPH			

ALCO RS-3 – 1600 H. P. LOCOMOTIVE

B.N. ENG. NUMBER	MAIN GEN.	ALTERNAT.	AUX. GEN.	TRACTION MOTOR	TOTAL WEIGHT	TRACTIVE EFFORT	DYNAMIC BRAKE	AIR BRAKE	AIR COMPRESS.	FUEL CAPY.			
4051-4065	GT-581	NONE	15 KW	752	249,500 LBS.	52,000 LBS.	NONE	6 SL	3-CDC	1400 GALS.			
4068	GT-581	NONE	15 KW	752	249,500 LBS.	52,000 LBS.	NONE	24 RL	3-CDC	1600 GALS.			
4070-4078	GT-581	NONE	15 KW	752	246,110 LBS.	52,000 LBS.	NONE	24 RL	3-CDC	1400 GALS.			
4081-4082	GT-581	NONE	15 KW	752	249,200 LBS.	52,000 LBS.	EQUIPPED	6 SLC	3-CDC	1400 GALS.			
4085	GT-581	NONE	12 KW	752	244,740 LBS.	52,000 LBS.	NONE	6 SLC	3-CDC	1400 GALS.			

ALCO RS-3 – 1600 H. P. LOCOMOTIVE

ENGINE NUMBERS
4054-4085

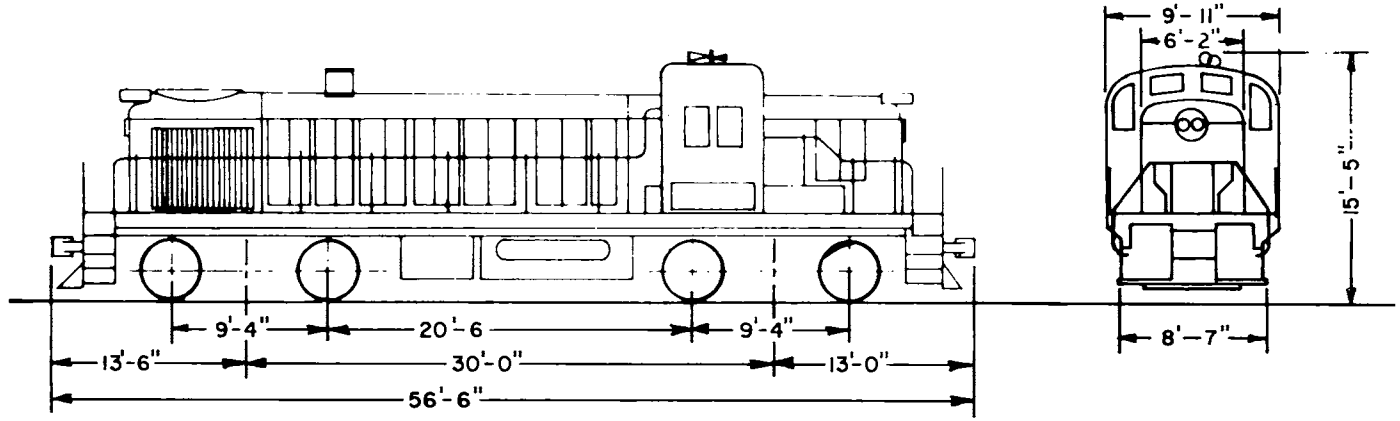

DIESEL ENGINE MODEL 12-244	AIR BRAKE CYLS . . . . . 10"x8"	BATTERY	NOTES:
TRANSITION . . . . . AUTOMATIC	JOURNALS. . . . TKN. . . . . 6½"x12"	CAPY. . . . . 64V. 426 AMP. HR.	
UNITS 4054-4078 . . . . . MANUAL	GEAR RATIO 18:74	COOLING SYSTEM . . . . . 250 GALS	
M.U. CONTROL . . . . . EQUIPPED	DRAFT GEAR M-17A	LUB. OIL CAPY. . . . . 200 GALS	
SPEED RECORDER . CHI PNEUMATIC	UNITS 4068-4078 . . . . . M-380	SAND CAPY. . . . . 28 CU. FT.	
SAFETY CONTROL . . . FOOT PEDAL	COUPLER . . . . . "E"		
CONT. RATED SPEED . . . . . 10.0 MPH		TOILET . . . . . EQUIPPED	
MAX. SPEED . . . . . 70 MPH			

ALCO RS-11 — 1800 H. P. LOCOMOTIVE

B.N. ENG. NUMBER	MAIN GEN.	ALTERNAT.	AUX. GEN.	TRACTION MOTOR	TOTAL WEIGHT	TRACTIVE EFFORT	DYNAMIC BRAKE	AIR BRAKE	AIR COMPRESS.	FUEL CAPY.	EXCITER		
4180-4185	GT-581	NONE	12 KW	752	247,880 LBS.	53,000 LBS.	NONE	24-RL	3-CDB	1200 GALS.	GTA 6A1		
4186-4191	GT-581	NONE	12 KW	752	247,880 LBS.	53,000 LBS.	EQUIPPED	24-RL	3-CDB	1200 GALS.	GTA 6A1		
4192-4197	GT-581	NONE	12 KW	752	247,880 LBS.	53,000 LBS.	EQUIPPED	26-L	3-CDB	1500 GALS.	GTA 6A1		

ALCO RS-11 – 1800 H. P. LOCOMOTIVE

ENGINE NUMBERS
4180-4197

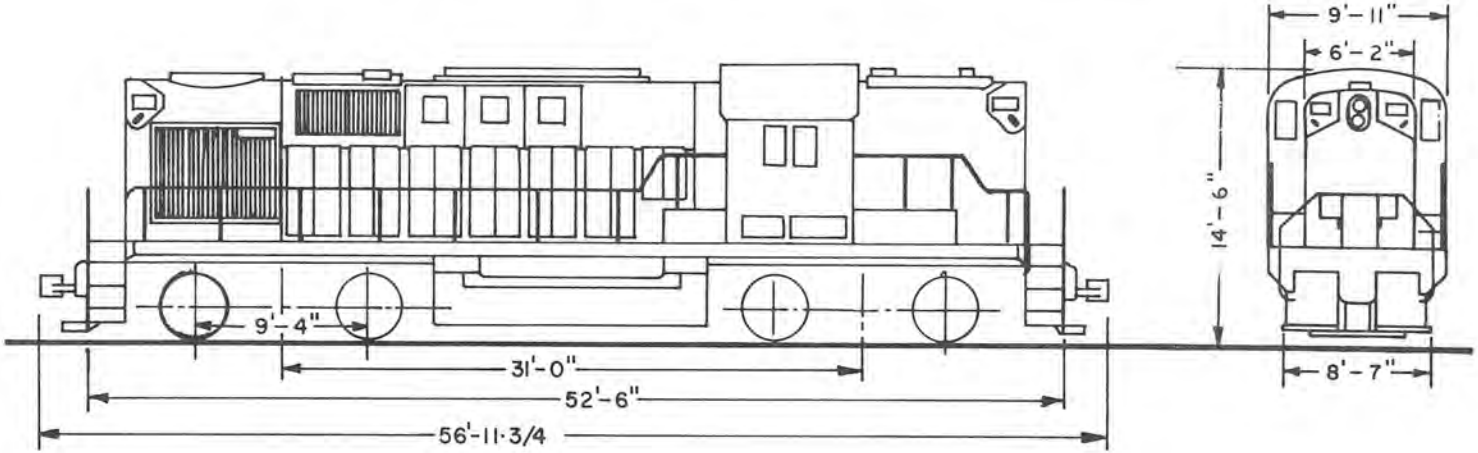

DIESEL ENGINE MODEL 12-251B	AIR BRAKE CYLS. . . . . 10"x8"	BATTERY	NOTES:
TRANSITION . . . . . AUTOMATIC	JOURNALS . . . TKN . . . . . 6½"x12"	CAPY. . . . . 64V. 426 AMP. HR.	
M.U. CONTROL . . . . . EQUIPPED	GEAR RATIO 18.74	COOLING SYSTEM . . . . . 250 GALS.	
SPEED RECORDER . CHI.PNEUMATIC	DRAFT GEAR MF-400-2	UNITS 4192-4197 . . . . . 262 GALS.	
SAFETY CONTROL . . . FOOT PEDAL	COUPLER . . . . . "E"	LUB OIL CAPY. . . . . 200 GALS.	
		SAND CAPY. . . . . 28 CU. FT.	
CONT. RATED SPEED . . . . . 10 MPH			
MAX. SPEED . . . . . 70 MPH		TOILET . . . . . EQUIPPED	

E.M.D. E-8 — 2250 H. P. LOCOMOTIVE

B.N. ENG. NUMBER	MAIN GEN.	ALTERNAT.	AUX. GEN.	TRACTION MOTOR	TOTAL WEIGHT	TRACTIVE EFFORT	DYNAMIC BRAKE	AIR BRAKE	AIR COMPRESS.	FUEL CAPY.			
9967-9976	D-15-B	D-16	10 KW	D-27	231,012 LBS.	23,500 LBS.	NONE	24 RL	ABO	1200 GALS.			

E.M.D. E-8 – 2250 H. P. LOCOMOTIVE

ENGINE NUMBERS
9967-9976

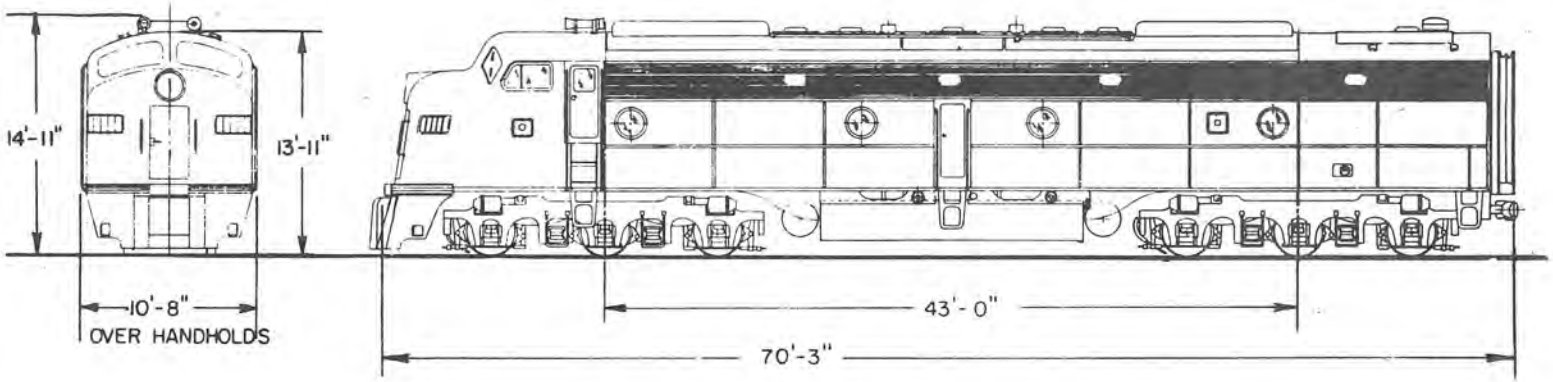

DIESEL ENGINE MODEL (2) . 12-567B	AIR BRAKE CYLS. . . . . .11"x10"	BATTERY	NOTES:
TRANSITION . . . . . AUTOMATIC	JOURNALS . HY.RB. . . . . 6½"x12"	CAPY. . . . . 64V. 426 AMP. HR.	
M.U. CONTROL . . . . . EQUIPPED	GEAR RATIO 22:55	COOLING SYSTEM . . . . . 400 GALS.	
SPEED RECORDER . . . . . BARCO	DRAFT GEAR M-380	LUB.OIL CAPY. . . . . 330 GALS.	
SAFETY CONTROL . . .FOOT PEDAL	COUPLER . . . . . ."H"	SAND CAPY. . . . . 16 CU. FT.	
CONT. RATED SPEED . . . . . 30 MPH			
MAX. SPEED . . . . . 79 MPH		TOILET . . . . . EQUIPPED	

E.M.D. E-9 – 2400 H. P. LOCOMOTIVE

B.N. ENG. NUMBER	MAIN GEN.	ALTERNAT.	AUX. GEN.	TRACTION MOTOR	TOTAL WEIGHT	TRACTIVE EFFORT	DYNAMIC BRAKE	AIR BRAKE	AIR COMPRESS.	FUEL CAPY.			
9900-9904	D-25	D-16	10 KW	D-77	330,500 LBS.	23,500 LBS.	NONE	PS-68	ABO	2400 GALS.			
9910-9925	D-25-B	D-16	10 KW	D-77	330,500 LBS.	23,500 LBS.	NONE	PS-68	ABO	2400 GALS.			

E.M.D. E-9 – 2400 H. P. LOCOMOTIVE

ENGINE NUMBERS
9900-9904, 9910-9925

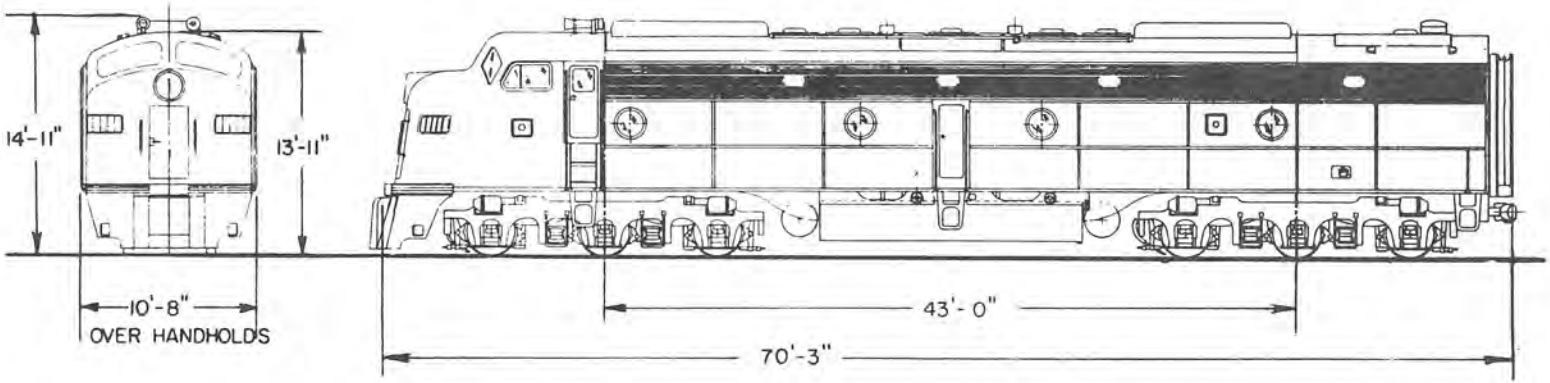

DIESEL ENGINE MODEL (2) . 12-645E
TRANSITION . . . . . AUTOMATIC
M.U. CONTROL . . . . . EQUIPPED
SPEED RECORDER . . . . . BARCO
SAFETY CONTROL . . . FOOT PEDAL

CONT. RATED SPEED . . . . . 31 MPH
MAX. SPEED . . . . . 79 MPH

AIR BRAKE CYLS. . . . . .11"x10"
JOURNALS. .HY. RB. . . . . 6½"x12"
GEAR RATIO 22:55
DRAFT GEAR M-380
COUPLER . . . . . ."H"

BATTERY
CAPY. . . . . 64V. 426 AMP. HR.
COOLING SYSTEM . . . . . 436 GALS.
LUB.OIL CAPY. . . . . 330 GALS.
SAND CAPY. . . . . 22 CU. FT.

TOILET . . . . . NOT EQUIPPED

NOTES:

LOCOS. LEASED FROM WEST SUBURBAN MASS TRANSIT DIST.

AUX. POWER PLANT DIESEL ENG. MODEL 16VGTI-500 GEN. 500KW-480V-3 PHASE.

E.M.D. F-3 – 1500 H. P. LOCOMOTIVE

B.N. ENG. NUMBER	MAIN GEN.	ALTERNAT.	AUX. GEN.	TRACTION MOTOR	TOTAL WEIGHT	TRACTIVE EFFORT	DYNAMIC BRAKE	AIR BRAKE	AIR COMPRESS.	FUEL CAPY.			
702	D-12	D-14	10 KW	D-27	245,000 LBS.	41,000 LBS.	EQUIPPED	24 RL	WXE	1200 GALS.			
710,712	D-12	D-14	18 KW	D-27	249,620 LBS.	41,000 LBS.	NONE	24 RL	WXE	1200 GALS.			

E.M.D. F-3 – 1500 H. P. LOCOMOTIVE

ENGINE NUMBERS
702,710,712

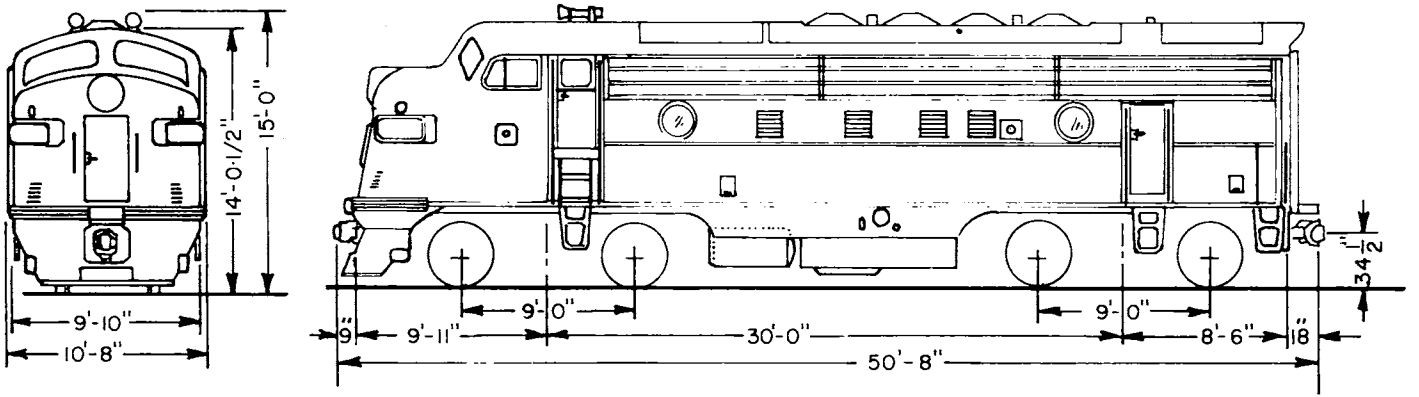

DIESEL ENGINE MODEL 16-567B	AIR BRAKE CYLS. . . . . 9"x8"	BATTERY	NOTES:
TRANSITION . . . . . AUTOMATIC	JOURNALS . . . HY. RB. . . . 6½"x12"	CAPY. . . . . 64V. 426 AMP. HR.	
M.U. CONTROL . . . . . EQUIPPED	GEAR RATIO 15:62	COOLING SYSTEM . . . . . 230 GALS.	
SPEED RECORDER . CHI.PNEUMATIC	DRAFT GEAR M-380	LUB.OIL CAP. . . . . 200 GALS.	
SAFETY CONTROL . . . . . NONE	COUPLER . . . . . FRONT "E"	SAND CAPY. . . . . 16 CU. FT.	
CONT. MIN. SPEED . . . . . 14.0 MPH	REAR "H"	TOILET . . . . . NOT EQUIPPED	
MAX. SPEED . . . . . 66 MPH			

E.M.D. FP-3-7 – 1500 H. P. LOCOMOTIVE

B.N. ENG. NUMBER	MAIN GEN.	ALTERNAT.	AUX. GEN.	TRACTION MOTOR	TOTAL WEIGHT	TRACTIVE EFFORT	DYNAMIC BRAKE	AIR BRAKE	AIR COMPRESS.	FUEL CAPY.			
704	D-12	D-14	18 KW	D-27	249,420 LBS.	30,000 LBS.	POTENTIAL	24 RL	WXO	900 GALS.			
706,708	D-12	D-14	18 KW	D-27	249,420 LBS.	30,000 LBS.	NONE	24 RL	WXO	900 GALS.			

E.M.D. FP-3-7 — 1500 H. P. LOCOMOTIVE

ENGINE NUMBERS
704, 706, 708

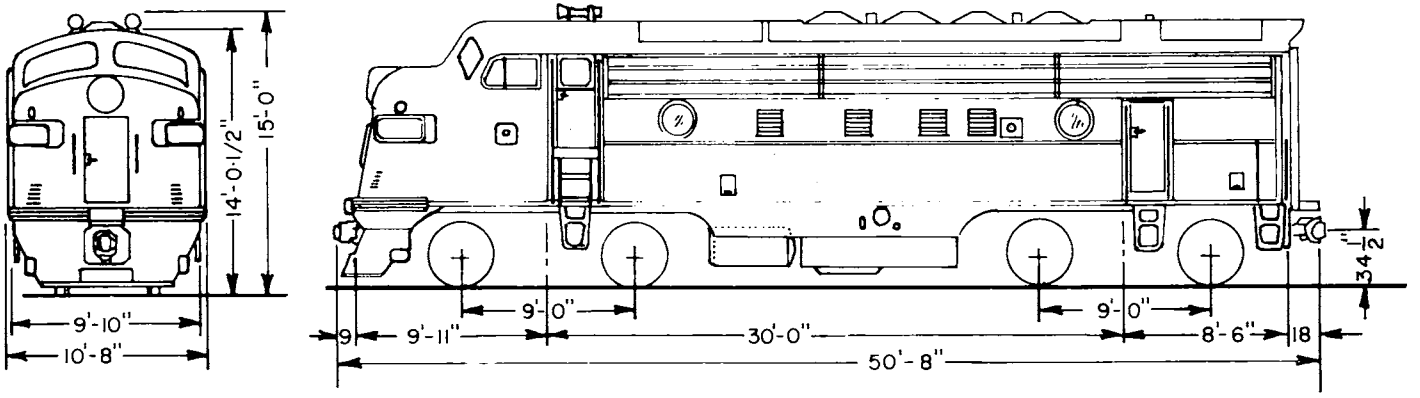

DIESEL ENGINE MODEL . . . 16-567B	AIR BRAKE CYLS. . . . . 9"x8"	BATTERY	NOTES:
TRANSITION . . . . . AUTOMATIC	JOURNALS. . . HY. RB. . 6-7/8" x 12"	CAPY. . . . . 64V. 426 AMP. HR.	
M.U. CONTROL . . . . . EQUIPPED	GEAR RATIO 15:62	COOLING SYSTEM . . . . . 230 GALS.	
SPEED RECORDER . CHI.PNEUMATIC	DRAFT GEAR M-380	LUB.OIL CAPY. . . . . 200 GALS.	
SAFETY CONTROL . . . . . NONE	COUPLER TYPE . . . . . "H"	SAND CAPY. . . . . 16 CU. FT.	
CONT. RATED SPEED . . . . .14.0 MPH			
MAX. SPEED . . . . . 66 MPH		TOILET . . . . . EQUIPPED	

E.M.D. F-5 – 1500 H. P. LOCOMOTIVE

B.N. ENG. NUMBER	MAIN GEN.	ALTERNAT.	AUX. GEN.	TRACTION MOTOR	TOTAL WEIGHT	TRACTIVE EFFORT	DYNAMIC BRAKE	AIR BRAKE	AIR COMPRESS.	FUEL CAPY.			
676	D-12	D-14	10 KW	D-27	233,200 LBS.	41,000 LBS.	EQUIPPED	24 RL	WXO	1200 GALS.			

E.M.D. F-5 — 1500 H. P. LOCOMOTIVE

ENGINE NUMBERS
676

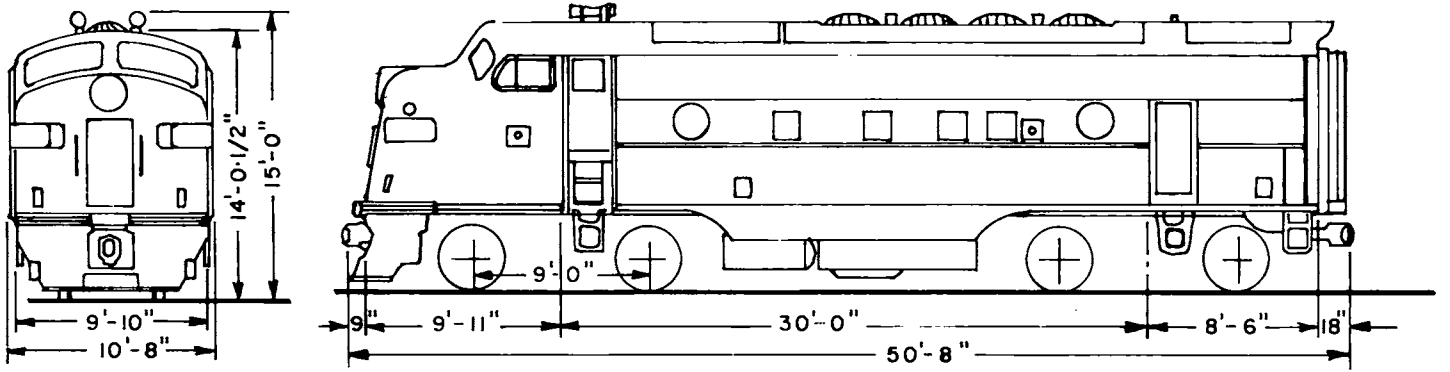

DIESEL ENGINE MODEL 16-567B
TRANSITION . . . . . AUTOMATIC
M.U. CONTROL . . . . . EQUIPPED
SPEED RECORDER . CHI.PNEUMATIC
SAFETY CONTROL . . . FOOT PEDAL

CONT. RATED SPEED . . . . . 11 MPH
MAX. SPEED . . . . . 66 MPH

AIR BRAKE CYLS. . . . . 9"x8"
JOURNALS. . . HY. RB. . . 6-7/8"x12"
GEAR RATIO 15:62
DRAFT GEAR M-380
COUPLER . . . . . FRONT "E"
REAR "H"

BATTERY
CAPY.. . . . . 64V. 426 AMP. HR.
COOLING SYSTEM . . . . . 230 GALS.
LUB.OIL CAPY. . . . . 200 GALS.
SAND CAPY. . . . . 16 CU. FT.

TOILET . . . . . EQUIPPED

NOTES:

E.M.D. F-7 — 1500 H. P. LOCOMOTIVE

B.N. ENG. NUMBER	MAIN GEN.	ALTERNAT.	AUX. GEN.	TRACTION MOTOR	TOTAL WEIGHT	TRACTIVE EFFORT	DYNAMIC BRAKE	AIR BRAKE	AIR COMPRESS.	FUEL CAPY.			
602,610	D-12	D-14	10 KW	D-27	243,320 LBS.	41,000 LBS.	NONE	24-RL	WXO	1200 GALS.			
626	D-12	D-14	10 KW	D-27	240,600 LBS.	41,000 LBS.	POTENTIAL	24-RL	WXO	1200 GALS.			
644	D-12	D-14	10 KW	D-27	247,300 LBS.	41,000 LBS.	POTENTIAL	24-RL	WXO	1200 GALS.			
668	D-12	D-14	10 KW	D-27	232,520 LBS.	41,000 LBS.	POTENTIAL	24-RL	WXO	1200 GALS.			
682,684	D-12	D-14	10 KW	D-27	248,600 LBS.	41,000 LBS.	POTENTIAL	24-RL	WXO	1200 GALS.			
720,730, 732,738	D-12-B	D-14	10 KW	D-27	246,120 LBS.	41,000 LBS.	FLD.LOOP	24-RL	WXO	1200 GALS.			
744, 752, 758	D-12-B	D-14	10 KW	D-27	246,120 LBS.	41,000 LBS.	FLD.LOOP	24-RL	WXO	1200 GALS.			
726	D-12-B	D-14	18 KW	D-27	254,850 LBS.	41,000 LBS.	NONE	24-RL	WXO	1200 GALS.			

E.M.D. F-7 – 1500 H. P. LOCOMOTIVE

ENGINE NUMBERS
602-684, 714-758 (EVEN NOS.)

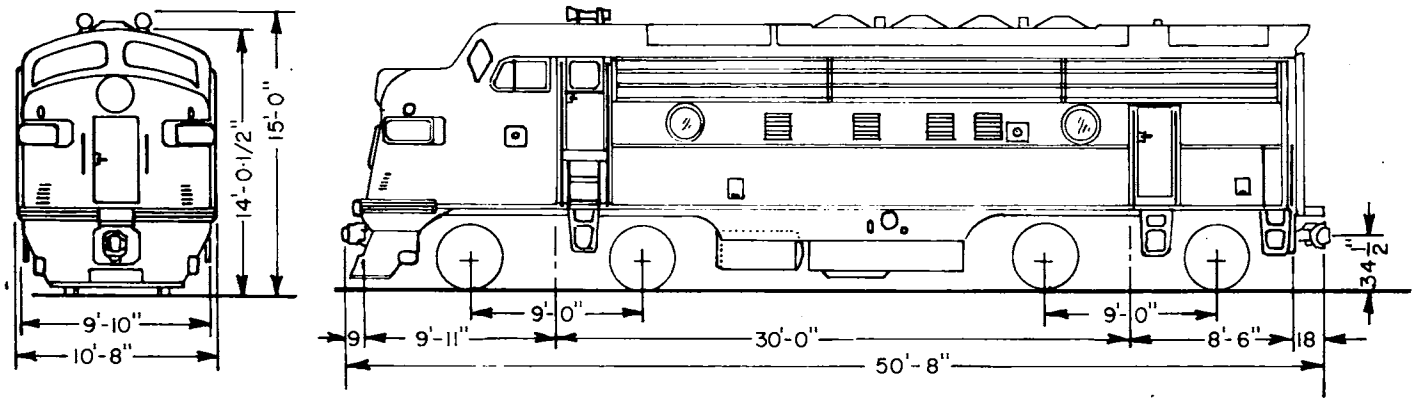

DIESEL ENGINE MODEL . . . . 16-567B TRANSITION . . . . . AUTOMATIC M.U. CONTROL . . . . . EQUIPPED SPEED RECORDER . CHI.PNEUMATIC SAFETY CONTROL . . . . . NONE CONT. RATED SPEED 15:62 . . 14 MPH MAX. SPEED . . . . . 15:62 . . 66 MPH	AIR BRAKE CYLS. . . . . 9"x8" UNIT 726 . . . . . 10"x8" JOURNALS . . . HY. RB. . . . 6½"x12" GEAR RATIO . . . . . 15:62 DRAFT GEAR . . . . . M-380 COUPLER . . . . . FRONT "E" REAR "H"	BATTERY CAPY. . . . . 64V. 426 AMP. HR. COOLING SYSTEM . . . . . 230 GALS. LUB.OIL CAPY. . . . . 200 GALS. SAND CAPY. . . . . 16 CU. FT. PACESETTER TRAIL . . . . . UNIT 644 TOILET . . . . . EQUIPPED	NOTES:

E.M.D. F-7 – 1500 H. P. LOCOMOTIVES

B.N. ENG. NUMBER	MAIN GEN.	ALTERNAT.	AUX. GEN.	TRACTION MOTOR	TOTAL WEIGHT	TRACTIVE EFFORT	DYNAMIC BRAKE	AIR BRAKE	AIR COMPRESS.	FUEL CAPY.			
645-653	D-12	D-14	10 KW	D-27	247,300 LBS.	41,000 LBS.	POTENTIAL	24-RL	WXO	1200 GALS.			
675	D-12	D-14	10 KW	D-27	233,200 LBS.	41,000 LBS.	POTENTIAL	24-RL	WXO	1200 GALS.			
725	D-12	D-14	10 KW	D-27	246,120 LBS.	41,000 LBS.	FLD.LOOP	24-RL	WXO	1200 GALS.			
733-737	D-12	D-14	10 KW	D-27	246,120 LBS.	41,000 LBS.	FLD.LOOP	24-RL	WXO	1200 GALS.			
741,751 753,761	D-12-B	D-14	10 KW	D-27	246,120 LBS.	41,000 LBS.	FLD.LOOP	24-RL	WXO	1200 GALS.			
703	D-12	D-14	18 KW	D-27	250,260 LBS.	30,300 LBS.	NONE	24-RL	WXO	900 GALS.			
705	D-12	D-14	18 KW	D-27	248,340 LBS.	30,000 LBS.	POTENTIAL	24-RL	WXO	1200 GALS.			
707	D-12	D-14	18 KW	D-27	251,040 LBS.	30,000 LBS.	NONE	24-RL	WXO	900 GALS.			

E.M.D. F-7 — 1500 H. P. LOCOMOTIVES

ENGINE NUMBERS
645, 653, 675, 725, 733-737, 741, 751,
753, 761, 703, 705, 707

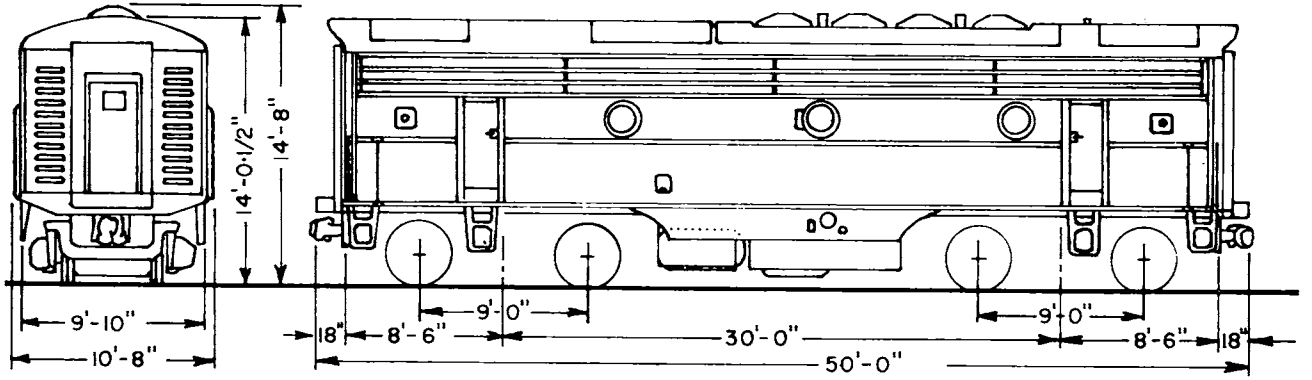

DIESEL ENGINE MODEL 16-567B	AIR BRAKE CYLS. . . . . 9"x8"	BATTERY	NOTES:
TRANSITION . . . . . AUTOMATIC	JOURNALS . . HY.RB. . . . . 6½"x12"	CAPY. . . . . 64V. 426 AMP. HR.	
M.U. CONTROL . . . . . EQUIPPED	GEAR RATIO 15:62	COOLING SYSTEM . . . . . 230 GALS.	
SPEED RECORDER . . . . . NONE	DRAFT GEAR M-380	LUB. OIL CAPY. . . . . 200 GALS.	
SAFETY CONTROL . . . . . NONE	COUPLER . . . . . "H"	SAND CAPY. . . . . 16 CU. FT.	
CONT. RATED SPEED . . . . . 14.0 MPH		PACESETTER TRAIL . . . . . UNIT 645	
MAX. SPEED . . . . . 66 MPH		TOILET . . . . . EQUIPPED	

E.M.D. F-9 — 1750 H. P. LOCOMOTIVE

B.N. ENG. NUMBER	MAIN GEN.	ALTERNAT.	AUX. GEN.	TRACTION MOTOR	TOTAL WEIGHT	TRACTIVE EFFORT	DYNAMIC BRAKE	AIR BRAKE	AIR COMPRESS.	FUEL CAPY.			
766,768,770	D-12	D-14	18 KW	D-27	249,780 LBS.	44,000 LBS.	POTENTIAL	24-RL	WXO	1200 GALS.			
772,774,776	D-12	D-14	18 KW	D-27	249,780 LBS.	44,000 LBS.	POTENTIAL	24 RL	WXO	1200 GALS.			
778,780,782	D-12	D-14	18 KW	D-27	249,780 LBS.	44,000 LBS.	POTENTIAL	24-RL	WXO	1200 GALS.			
784,786,788	D-12	D-14	18 KW	D-27	249,780 LBS.	44,000 LBS.	POTENTIAL	24-RL	WXO	1200 GALS.			
790,792,794	D-12	D-14	18 KW	D-27	249,780 LBS.	44,000 LBS.	POTENTIAL	24-RL	WXO	1200 GALS.			
796	D-12	D-14	18 KW	D-27	249,780 LBS.	44,000 LBS.	POTENTIAL	24-RL	WXO	1200 GALS.			
800,804,806	D-12	D-14	10 KW	D-27	248,790 LBS.	44,000 LBS.	POTENTIAL	24-RL	WXO	1200 GALS.			
808,810,812	D-12	D-14	10 KW	D-27	248,790 LBS.	44,000 LBS.	POTENTIAL	24-RL	WXO	1200 GALS.			
814,816,818	D-12	D-14	10 KW	D-27	248,790 LBS.	44,000 LBS.	POTENTIAL	24-RL	WXO	1200 GALS.			
820,824,826	D-12	D-14	10 KW	D-27	248,790 LBS.	44,000 LBS.	POTENTIAL	24-RL	WXO	1200 GALS.			
828,830,832	D-12	D-14	10 KW	D-27	248,790 LBS.	44,000 LBS.	POTENTIAL	24-RL	WXO	1200 GALS.			
834,836,838	D-12	D-14	10 KW	D-27	248,790 LBS.	44,000 LBS.	POTENTIAL	24-RL	WXO	1200 GALS.			
840,842,844	D-12	D-14	10 KW	D-27	248,790 LBS.	44,000 LBS.	POTENTIAL	24-RL	WXO	1200 GALS.			

E.M.D. F-9 — 1750 H. P. LOCOMOTIVE

ENGINE NUMBERS
800-844, 766-796 (EVEN NOS.)

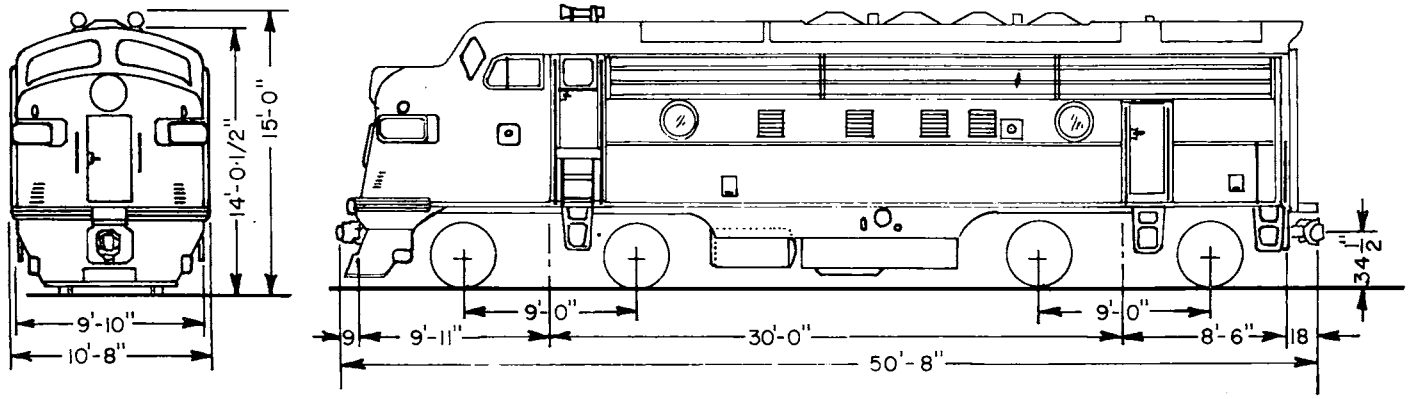

DIESEL ENGINE MODEL 16-567C	AIR BRAKE CYLS. . . . . 9"x8"	BATTERY	**NOTES:**
TRANSISTION . . . . . AUTOMATIC	UNITS 766-796 (EVEN) . . . 10"x8"	CAPY. . . . . 64V. 426 AMP. HR.	
M.U. CONTROL . . . . . EQUIPPED	JOURNALS . . HY.RB. . . . 6-7/8"x12"	COOLING SYSTEM . . . . . 230 GALS.	
SPEED RECORDER . CHI.PNEUMATIC	GEAR RATIO 15:62	LUB.OIL CAPY. . . . . 200 GALS.	
SAFETY CONTROL . . . . . NONE	DRAFT GEAR M-380	SAND CAPY. . . . . 16 CU. FT.	
	COUPLER . . . . . FRONT "E"		
CONT. RATED SPEED . . . . . 12 MPH	REAR "H"		
MAX. SPEED . . . . . 66 MPH		TOILET . . . . . EQUIPPED	

E.M.D. F-9 – 1750 H. P. LOCOMOTIVE

B.N. ENG. NUMBER	MAIN GEN.	ALTERNAT.	AUX. GEN.	TRACTION MOTOR	TOTAL WEIGHT	TRACTIVE EFFORT	DYNAMIC BRAKE	AIR BRAKE	AIR COMPRESS.	FUEL CAPY.			
767,769,771	D-12	D-14	18 KW	D-27	249,780 LBS.	44,000 LBS.	POTENTIAL	24-RL	WXO	1200 GALS.			
773,775,777	D-12	D-14	18 KW	D-27	249,780 LBS.	44,000 LBS.	POTENTIAL	24-RL	WXO	1200 GALS.			
779,781,783	D-12	D-14	18 KW	D-27	249,780 LBS.	44,000 LBS.	POTENTIAL	24-RL	WXO	1200 GALS.			
785,787	D-12	D-14	18 KW	D-27	249,780 LBS.	44,000 LBS.	POTENTIAL	24-RL	WXO	1200 GALS.			
801,803,805	D-12	D-14	10 KW	D-27	248,790 LBS.	44,000 LBS.	POTENTIAL	24-RL	WXO	1200 GALS.			
807,809,813	D-12	D-14	10 KW	D-27	248,790 LBS.	44,000 LBS.	POTENTIAL	24-RL	WXO	1200 GALS.			
815,817,819	D-12	D-14	10 KW	D-27	248,790 LBS.	44,000 LBS.	POTENTIAL	24-RL	WXO	1200 GALS.			
821,823,825	D-12	D-14	10 KW	D-27	248,790 LBS.	44,000 LBS.	POTENTIAL	24-RL	WXO	1200 GALS.			
827,829,831	D-12	D-14	10 KW	D-27	248,790 LBS.	44,000 LBS.	POTENTIAL	24-RL	WXO	1200 GALS.			
833,835,837	D-12	D-14	10 KW	D-27	248,790 LBS.	44,000 LBS.	POTENTIAL	24-RL	WXO	1200 GALS.			
839,843,845	D-12	D-14	10 KW	D-27	248,790 LBS.	44,000 LBS.	POTENTIAL	24-RL	WXO	1200 GALS.			
847,849,	D-12	D-14	10 KW	D-27	246,000 LBS.	44,000 LBS.	POTENTIAL	24-RL	WXO	1200 GALS.			
851,853	D-12	D-14	10 KW	D-27	246,000 LBS.	44,000 LBS.	POTENTIAL	24-RL	WXO	1200 GALS.			

E.M.D. F-9 — 1750 H. P. LOCOMOTIVE

ENGINE NUMBERS
767-787, 801-853 (ODD NOS.)

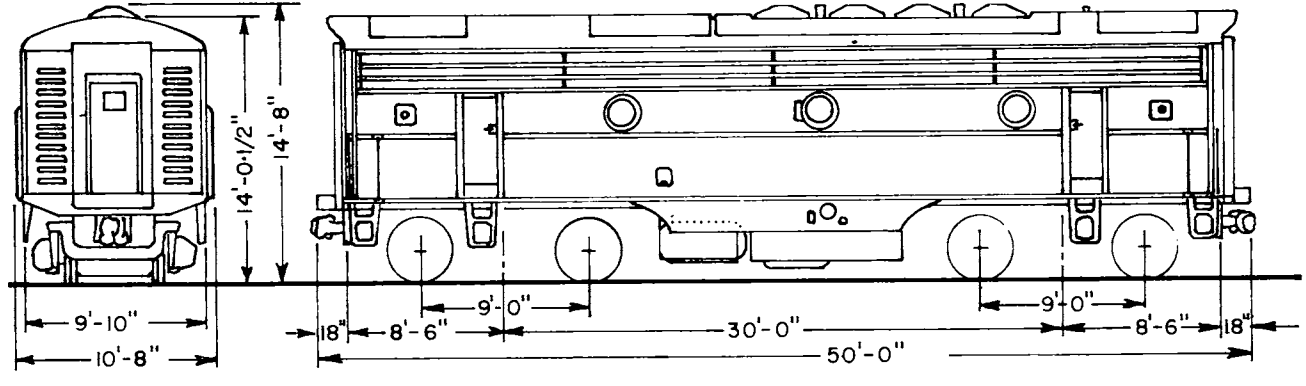

DIESEL ENGINE MODEL 16-567C	AIR BRAKE CYLS. . . . . 9"x8"	BATTERY	NOTES:
TRANSITION . . . . . AUTOMATIC	UNITS 767-853 (ODD) . . . . 10"x8"	CAPY. . . . . 64V. 426 AMP. HR.	
M.U. CONTROL . . . . . EQUIPPED	JOURNALS . . HY.RB. . . . 6-7/8"x12"	COOLING SYSTEM . . . . . 230 GALS	
SPEED RECORDER . . . . . NONE	GEAR RATIO 15:62	LUB.OIL CAPY. . . . . 200 GALS.	
SAFETY CONTROL . . . . . NONE	DRAFT GEAR M-380	SAND CAPY. . . . . 16 CU. FT.	
	COUPLER . . . . . "H"		
CONT. RATED SPEED . . . . . 12.0 MPH			
MAX. SPEED . . . . . 66 MPH		TOILET . . . . . EQUIPPED	

E.M.D. F-45 – 3600 H. P. LOCOMOTIVE

B.N. ENG. NUMBER	MAIN GEN.	ALTERNAT.	AUX. GEN.	TRACTION MOTOR	TOTAL WEIGHT	TRACTIVE EFFORT	DYNAMIC BRAKE	AIR BRAKE	AIR COMPRESS.	FUEL CAPY.			
6600-6613	AR-10	D-14	10 KW	D-77	387,200 LBS.	74,200 LBS.	POTENTIAL	26-L	WBG	4000 GALS.			
6614-6625	AR-10	D-14	10 KW	D-77	379,500 LBS.	71,000 LBS.	POTENTIAL	26-L	WBG	4000 GALS.			
6626-6645	AR-10	D-14	10 KW	D-77	382,400 LBS.	74,200 LBS.	POTENTIAL	26-L	WBG	4000 GALS.			

E.M.D. F-45 – 3600 H. P. LOCOMOTIVE

ENGINE NUMBERS
6600-6645

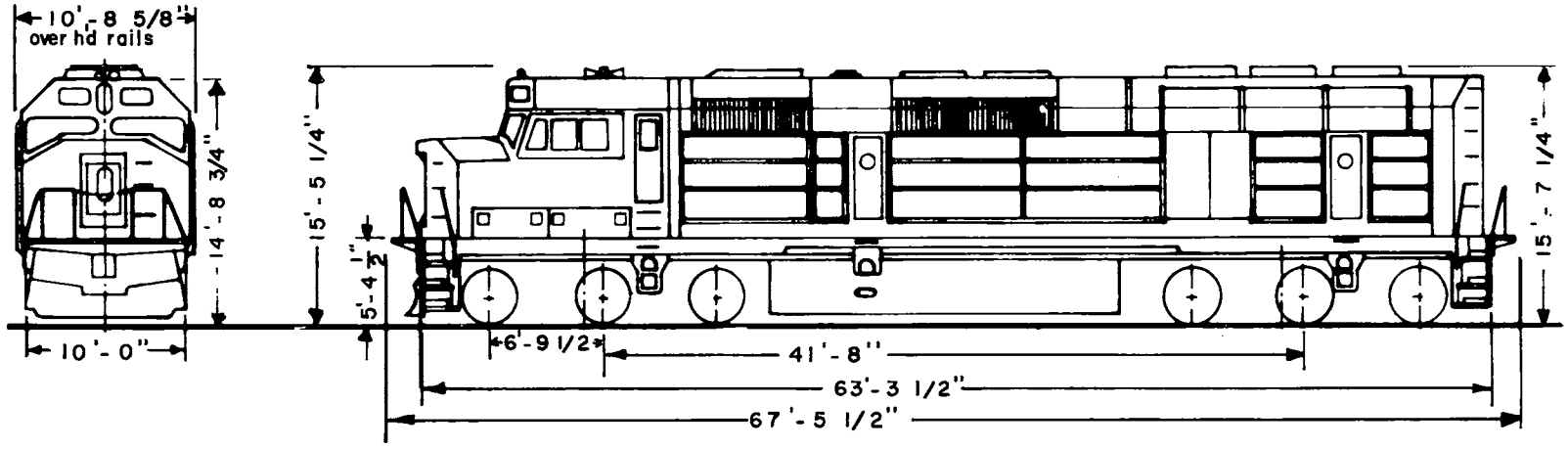

DIESEL ENGINE MODEL . . . 20-645E3 TRANSITION . . . . . AUTOMATIC M.U. CONTROL . . . . . EQUIPPED SPEED RECORDER . . . MECH. BARCO UNITS 6614-6625 . . ELECT.BARCO SAFETY CONTROL . . . FOOT PEDAL CONT. RATED SPEED . . . . . 9 MPH UNITS 6614-6625 . . . . . 13.2 MPH MAX. SPEED . . . . . 77 MPH	AIR BRAKE CYLS. . . . . 9"x8" JOURNALS . . HY.RB. . . . . 6½"x12" UNITS 6625-6645 HY.RB. . . . . 6-7/8"x12" GEAR RATIO . . . . . 17:60 DRAFT GEAR . . . . . M-380A UNITS 6626-6645 . . . . . NC-390 COUPLER . . (AL.CONT.) . . . . . "F"	BATTERY CAPY . . . . . 64V. 426 AMP. HR. COOLING SYSTEM . . . . . 288 GALS. LUB.OIL CAPY. . . . . 294 GALS. SAND CAPY. . . . . 56 CU. FT. SEARCH HARNESS . . . . . EQUIPPED TOILET . . . . . EQUIPPED	NOTES:

E.M.D. GP-5 – 1350 H. P. LOCOMOTIVE

B.N. ENG. NUMBER	MAIN GEN.	ALTERNAT.	AUX. GEN.	TRACTION MOTOR	TOTAL WEIGHT	TRACTIVE EFFORT	DYNAMIC BRAKE	AIR BRAKE	AIR COMPRESS.	FUEL CAPY.			
1350	D-8	D-14	10 KW	D-27	243,320 LBS.	31,250 LBS.	NONE	6-BLC	WBO	1700 GALS.			
1351-1353	D-12	D-14	10 KW	D-27	243,320 LBS.	31,250 LBS.	NONE	6-BLC	WBO	1700 GALS.			
1354,1355	D-8	D-14	10 KW	D-27	243,320 LBS.	31,250 LBS.	NONE	6-BLC	WBO	1700 GALS.			
1356,1357	D-12	D-14	10 KW	D-27	243,320 LBS.	31,250 LBS.	NONE	6-BLC	WBO	1700 GALS.			
1358	D-8	D-14	10 KW	D-27	243,320 LBS.	31,250 LBS.	NONE	6-BLC	WBO	1700 GALS.			
1359,1360	D-12	D-14	10 KW	D-27	243,320 LBS.	31,250 LBS.	NONE	6-BLC	WBO	1700 GALS.			
1361	D-8	D-14	10 KW	D-27	243,320 LBS.	31,250 LBS.	NONE	6-BLC	WBO	1700 GALS.			
1362-1365	D-12	D-14	10 KW	D-27	243,320 LBS.	31,250 LBS.	NONE	6-BLC	WBO	1700 GALS.			

E.M.D. GP-5 — 1350 H. P. LOCOMOTIVE

ENGINE NUMBERS
1350-1365

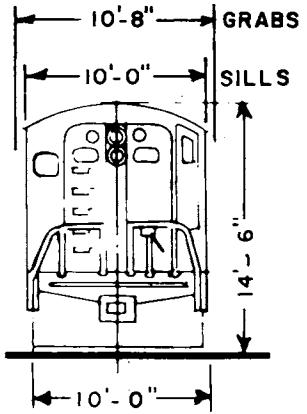

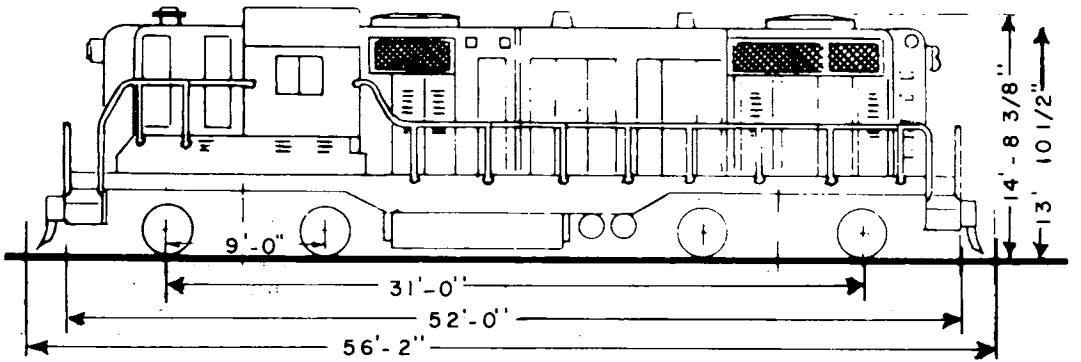

DIESEL ENGINE MODEL . . . 16-567BC TRANSITION . . . . . AUTOMATIC M.U. CONTROL . . . . . EQUIPPED SPEED RECORDER . CHI.PNEUMATIC UNITS 1354-1365 . . MECH.BARCO SAFETY CONTROL . . . FOOT PEDAL CONT. RATED SPEED . . . . . 15 MPH MAX. SPEED . . . . . 66 MPH	AIR BRAKE CYLS. . . . . 9"x8" JOURNALS . . . . . 6-7/8"x12" GEAR RATIO . . . . . 15.62 DRAFT GEAR . . . . . M-375 COUPLER . . (AL.CONT.) . . . . . "E"	BATTERY CAPY. . . . . 64V. 426 AMP. HR. TOILET . . . . . EQUIPPED	NOTES: 1365 HAS LOW SHORT HOOD.

E.M.D. GP-7 – 1500 H. P. LOCOMOTIVE

B.N. ENG. NUMBER	MAIN GEN.	ALTERNAT.	AUX. GEN.	TRACTION MOTOR	TOTAL WEIGHT	TRACTIVE EFFORT	DYNAMIC BRAKE	AIR BRAKE	AIR COMPRESS.	FUEL CAPY.			
1524-1526	D-12	D-14	18 KW	D-27	249,300 LBS.	41,000 LBS.	NONE	6-BLC	WXG	1200 GALS.			
1528-1551	D-12	D-14	18 KW	D-27	249,300 LBS.	41,000 LBS.	NONE	6-BLC	WXG	1200 GALS.			
1552	D-12	D-14	18 KW	D-27	250,620 LBS.	41,000 LBS.	NONE	6-BLC	WXG	1200 GALS.			
1553-1555	D-12	D-14	18 KW	D-27	250,620 LBS.	41,000 LBS.	NONE	6-BLC	WXG	1200 GALS.			
1556-1623	D-12-B	D-14	18 KW	D-27	250,620 LBS.	41,000 LBS.	NONE	6-BLQ	WXO	1600 GALS.			
1624-1629	D-12-B	D-14	18 KW	D-27	254,250 LBS.	41,000 LBS.	NONE	6-BLC	WXE	2200 GALS.			
1630-1633	D-12-B	D-14	18 KW	D-27	254,250 LBS.	41,000 LBS.	NONE	6-BLC	WXO	2200 GALS.			
1634-1637	D-12-B	D-14	10 KW	D-27	254,250 LBS.	41,000 LBS.	NONE	6-BLC	WXG	2200 GALS.			
1638-1642	D-12-B	D-14	10 KW	D-27	254,250 LBS.	41,000 LBS.	FLD. LOOP	6-BLC	WXG	1600 GALS.			
1643	D-12-B	D-14	10 KW	D-27	248,750 LBS.	41,000 LBS.	FLD.LOOP	6-BLC	WXG	1600 GALS.			
FWD 700-703	D-12	D-14	18 KW	D-27	247,260 LBS.	41,000 LBS.	NONE	6-BLC	WXG	1600 GALS.			

E.M.D. GP-7 — 1500 H. P. LOCOMOTIVE

ENGINE NUMBERS
1524-1643, FWD 700-703

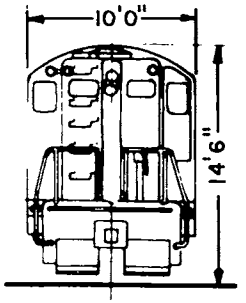

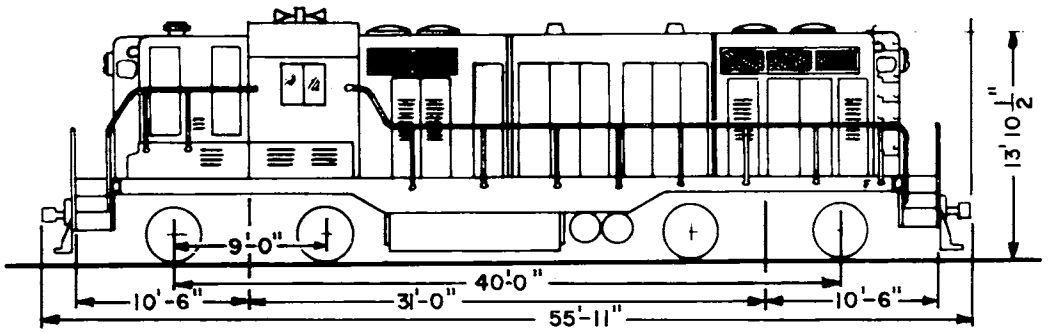

DIESEL ENGINE MODEL 16-567B	AIR BRAKE CYLS. . . . . 9"x8"	BATTERY	NOTES:
TRANSITION . . . . . AUTOMATIC	JOURNALS . . . HY.RB. . . 6-7/8"x12"	CAPY . . . . . 64V. 426 AMP. HR.	HUMP CONTROL
M.U. CONTROL . . . . . EQUIPPED	GEAR RATIO 15:62	COOLING SYSTEM . . . . . 230 GALS.	UNIT 1624, 1626
SPEED RECORDER . CHI.PNEUMATIC	DRAFT GEAR M-375	LUB.OIL CAPY. . . . . 200 GALS.	1636-1643
UNITS 1556-1623 . . . . . BARCO	UNITS 1609-1623 . . . . . M-380A	SAND CAPY. . . . . 18 CU. FT.	UNITS 1624-1625 HAVE 10"x8"
SAFETY CONTROL . . . FOOT PEDAL	COUPLER . . . . . "E"	DUAL CONTROL . . UNITS 1513,1520,	AIR BRAKE CYLS.
CONT. RATED SPEED . . . . . 11 MPH	1510-1555 (AL CONT)	1556-1623	
MAX. SPEED . . . . . 66 MPH	1624-1643	TOILET . . . . . EQUIPPED	

E.M.D. GP-9 — 1750 H. P. LOCOMOTIVE

B.N. ENG. NUMBER	MAIN GEN.	ALTERNAT.	AUX. GEN.	TRACTION MOTOR	TOTAL WEIGHT	TRACTIVE EFFORT	DYNAMIC BRAKE	AIR BRAKE	AIR COMPRESS.	FUEL CAPY.			
1700-1722	D-12-B	D-14	10 KW	D-27	257,430 LBS.	44,000 LBS.	POTENTIAL ****	6-BLC	WXG	1600 GALS.			
1723-1760	D-12-B	D-14	10 KW	D-27	246,180 LBS.	44,000 LBS.	POTENTIAL	24-RL	WXG	1700 GALS.			
1761-1772	D-12-B	D-14	10 KW	D-27	255,400 LBS.	44,000 LBS.	POTENTIAL	6-BLC	WXG	1600 GALS.			
1773-1775 1777-1784	D-12-B	D-14	10 KW	D-27	255,400 LBS.	44,000 LBS.	POTENTIAL	24-RL	WXG	1600 GALS.			
1785-1805	D-12-B	D-14	10 KW	D-27	255,400 LBS.	44,000 LBS.	POTENTIAL	24-RL	WXG	1700 GALS.			
1806,1807	D-12-B	D-14	10 KW	D-27	255,400 LBS.	44,000 LBS.	POTENTIAL	26-L	WXG	1700 GALS.			
1808-1830	D-12-B	D-14	10 KW	D-27	247,100 LBS.	44,000 LBS.	NONE	6-BLC	WXG	1600 GALS.			
1831,1832	D-12-B	D-14	18 KW	D-27	259,100 LBS.	44,000 LBS.	NONE	24-RL	WXG	2200 GALS.			
1833-1839	D-12-B	D-14	10 KW	D-27	259,100 LBS.	44,000 LBS.	NONE	6-BLC	WXG	1600 GALS.			
1840-1875 1877-1891	D-12-B	D-14	10 KW*	D-27	259,100 LBS.**	44,000 LBS.	NONE	6-BLC	WXG	2200 GALS.			
1892-1901	D-12-B	D-14	10 KW	D-27	258,300 LBS.	44,000 LBS.	NONE	6-BLC	WXG	2200 GALS.			
1902-1954	D-12-B	D-14	10 KW	D-27	248,173 LBS.	44,000 LBS.	NONE	24-RL	WXG	1700 GALS.			
1955-1974	D-12-B	D-14	18 KW	D-27	250,393 LBS.	44,000 LBS.	NONE	6-BLQ***	WXG	1600 GALS.			
1975, 1977-1978	D-12-B	D-14	18 KW	D-27	257,060 LBS.	44,000 LBS.	NONE	24-RL	WXG	2200 GALS.			
1979-1980	D-12-B	D-14	18 KW	D-27	257,060 LBS.	44,000 LBS.	NONE	24-RL	WXG	1600 GALS.			

**1867-1869 — 18KW* ***1867-1869 — 250,920 LBS.* ****1956-1965 — 6-BLCZ* *****1700-1703 — FLD. LOOP*

E.M.D. GP-9 – 1750 H. P. LOCOMOTIVE

ENGINE NUMBERS
1700-1775, 1777-1875, 1877-1975, 1977-1980

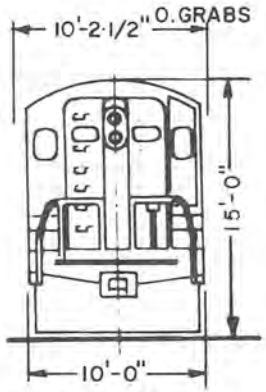

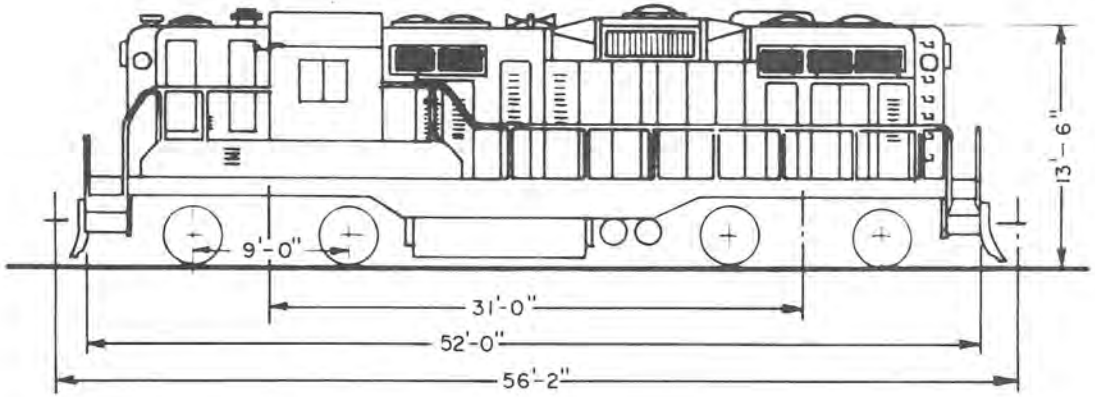

DIESEL ENGINE MODEL . . . . 16-567C TRANSITION . . . . . AUTOMATIC M.U. CONTROL . . . . . EQUIPPED SPEED RECORDER . CHI.PNEUMATIC UNITS 1761-1775,1777-1839 BARCO UNITS 1955-1974 . . . . . BARCO SAFETY CONTROL . . . FOOT PEDAL CONT. RATED SPEED . . . . . 12 MPH MAX. SPEED . . . . . 66 MPH	AIR BRAKE CYLS. . . . . 9"x8" JOURNAL . . . HY. RB. . . 6-7/8"x12" GEAR RATIO . . . . . .15:62 DRAFT GEAR . . . . . M-375 UNITS 1773-1775, 1777-1807 1833-1839, 1955-1975 1977-1990 . . . . . M-380 COUPLER . (AL. CONT.) . . . . . "E"	BATTERY CAPY. . . . . 64V. 426 AMP. HR. COOLING SYSTEM . . . . . 227 GALS. UNITS 1955-1974 . . . . . 230 GALS. LUB.OIL CAPY. . . . . 200 GALS. SAND CAPY. . . . . 18 CU. FT. DUAL CONTROL . . UNITS 1955-1974 EXT. RANGE DYN. BRAKE . . . . . UNITS 1795-1799 TOILET . . . . . EQUIPPED	NOTES:

E.M.D. GP-10 — 1800 H. P. LOCOMOTIVE

B.N. ENG. NUMBER	MAIN GEN.	ALTERNAT.	AUX. GEN.	TRACTION MOTOR	TOTAL WEIGHT	TRACTIVE EFFORT	DYNAMIC BRAKE	AIR BRAKE	AIR COMPRESS.	FUEL CAPY.			
1400-1438	D-12	D-14	10 KW	D-47	257,100 LBS.	44,000 LBS.	NONE	26-N	WBG	2350 GALS.			

E.M.D. GP-10 — 1800 H. P. LOCOMOTIVE

ENGINE NUMBERS
1400-1438

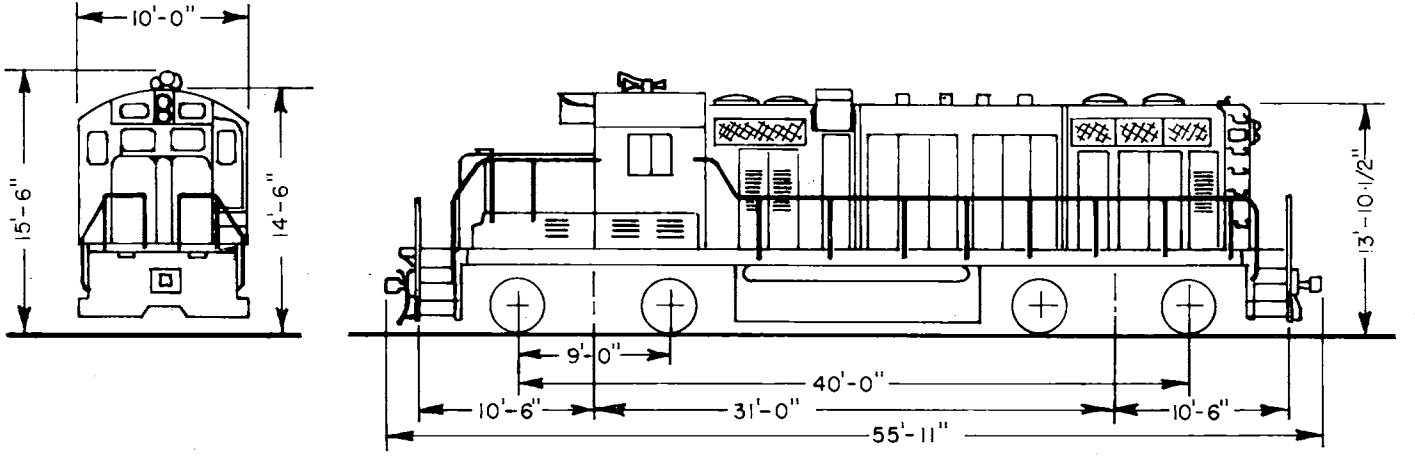

DEISEL ENGINE MODEL . . . 16-645BC
UNITS 1400-1403 HAVE
16-645C
TRANSITION . . . . . AUTOMATIC
M.U. CONTROL . . . . . EQUIPPED
SPEED RECORDER . CHI.PNEUMATIC
SAFETY CONTROL . . . FOOT PEDAL
CONT. RATED SPEED . . . . . 14 MPH
MAX. SPEED . . . . . 66 MPH

AIR BRAKE CYLS. . . . . 9"x8"
JOURNAL . . . HY.RB. . . . 6½"x12"
GEAR RATIO 15:62
DRAFT GEAR MS-485-5A
COUPLER . . . .(AL.CONT.) . . . . "E"

BATTERY
CAPY. . . . . 64V. 426 AMP. HR.
COOLING SYSTEM . . . . . 230 GALS.
LUB.OIL CAPY. . . . . 200 GALS.
SAND CAPY. . . . . 18 CU. FT.

TOILET . . . . . EQUIPPED

NOTES:
HUMP CONTROL

E.M.D. GP-18 – 1800 H.P. LOCOMOTIVE

B.N. ENG. NUMBER	MAIN GEN.	ALTERNAT.	AUX. GEN.	TRACTION MOTOR	TOTAL WEIGHT	TRACTIVE EFFORT	DYNAMIC BRAKE	AIR BRAKE	AIR COMPRESS.	FUEL CAPY.			
1990-1998	D-22-B	D-14	10 KW	D-47	248,220 LBS.	44,000 LBS.	POTENTIAL	26 L	WXG	1700 GALS.			

E.M.D. GP-18 — 1800 H.P. LOCOMOTIVE

ENGINE NUMBERS
1990-1998

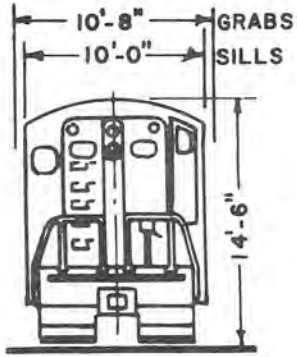

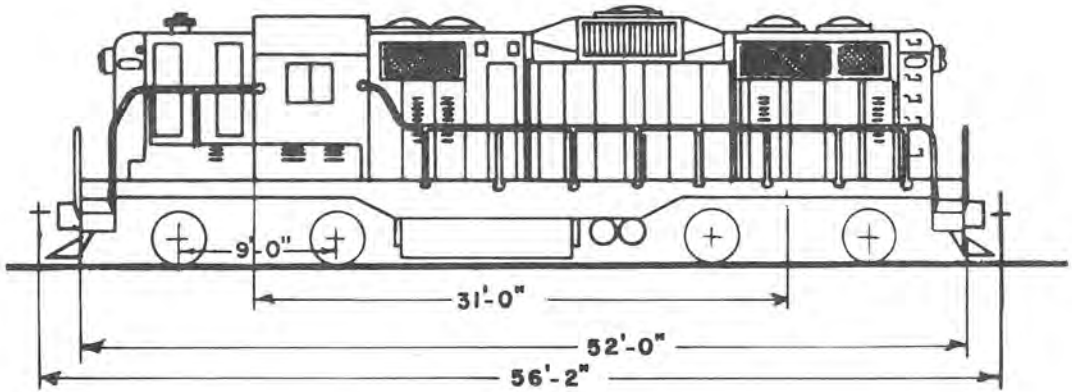

DIESEL ENGINE MODEL . . . 16-567D1	AIR BRAKE CYLS. . . . . 9"x8"	BATTERY CAPY. . 64V. 426 AMP. HR.	NOTES:
TRANSITION . . . . . AUTOMATIC	JOURNALS . . . HY.RB. . 6-7/8"x12"	COOLING SYSTEM . . . . . 227 GALS.	
M.U. CONTROL . . . . . EQUIPPED	GEAR RATIO 15:62	LUB.OIL CAPY. . . . . 220 GALS.	
SPEED RECORDER . CHI.PNEUMATIC	DRAFT GEAR MS-485-5A	SAND CAPY. . . . . 18 CU. FT.	
SAFETY CONTROL . . . . . NONE	COUPLER . . . (AL.CONT.) . . . . . "E"		
CONT.RATED SPEED . . . . . 12 MPH			
MAX. SPEED . . . . . 66 MPH		TOILET . . . . . EQUIPPED	

E.M.D. GP-20 – 2000 H.P. LOCOMOTIVE

B.N. ENG. NUMBER	MAIN GEN.	ALTERNAT.	AUX. GEN.	TRACTION MOTOR	TOTAL WEIGHT	TRACTIVE EFFORT	DYNAMIC BRAKE	AIR BRAKE	AIR COMPRESS.	FUEL CAPY.			
2001-2035	D-22	D-14	10 KW	D-47	257,100 LBS.	45.000 LBS.	POTENTIAL	26 L	WBG	1700 GALS.			
2036-2071	D-22-BT	D-14	10 KW	D-47	260,560 LBS.	45,000 LBS.	POTENTIAL	26 L	WBG	2275 GALS.			

E.M.D. GP-20 – 2000 H.P. LOCOMOTIVE

ENGINE NUMBERS
2001-2071

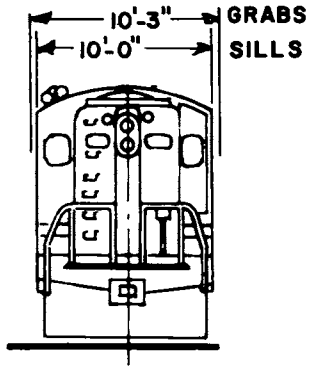

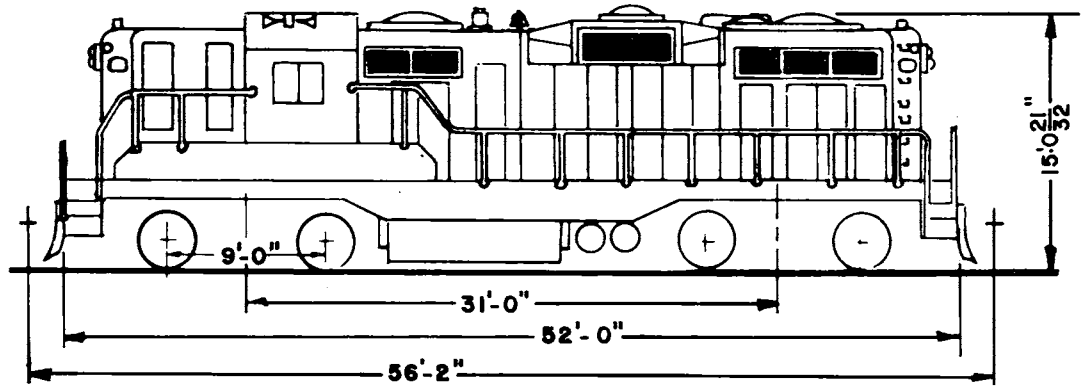

DIESEL ENGINE MODEL 16-567D
UNITS 2036-2071 . . . . . .16-567D2
TRANSITION . . . . . AUTOMATIC
M.U. CONTROL . . . . . .EQUIPPED
SPEED RECORDER .CHI. PNEUMATIC
UNITS 2001-2017 . .MECH. BARCO
SAFETY CONTROL . . .FOOT PEDAL
UNITS 2001-2035 ONLY
CONT. RATED SPEED . . . . . 14 MPH
MAX. SPEED . . . . . 66 MPH

AIR BRAKE CYLS. . . . . 9"x8"
JOURNALS. . . HY.RB. . 6-7/8"x12"
GEAR RATIO 15:62
DRAFT GEAR M-380-A
COUPLER . . . (AL.CONT.). . . . . "E"

BATTERY
CAPY. . . . . 64V. 420 AMP. HR.
COOLING SYSTEM . . . . . 227 GALS.
LUB. OIL CAPY. . . . . 220 GALS.
SAND CAPY. . . . . 18 CU. FT.

TOILET . . . . . .EQUIPPED

NOTES:

E.M.D. GP-30 – 2250 H.P. LOCOMOTIVE

B.N. ENG. NUMBER	MAIN GEN.	ALTERNAT.	AUX. GEN.	TRACTION MOTOR	TOTAL WEIGHT	TRACTIVE EFFORT	DYNAMIC BRAKE	AIR BRAKE	AIR COMPRESS.	FUEL CAPY.			
2200-2216	D-22	D-14	10 KW	D-57	260,720 LBS.	51,000 LBS.	POTENTIAL	26 L	WBO	2600 GALS.			
2217-2246	D-22-DT	D-14	10 KW	D-57	257,400 LBS.	51,000 LBS.	POTENTIAL	26 L	WBG	2600 GALS.			
2247-2250	D-22-DT	D-14	10 KW	D-57	260,313 LBS.	51,000 LBS.	POTENTIAL	26 L	WBG	2600 GALS.			
2251-2254	D-22-DT	D-14	10 KW	D-57	260,663 LBS.	51,000 LBS.	POTENTIAL	26 L	WBG	2600 GALS.			

E.M.D. GP-30 – 2250 H.P. LOCOMOTIVE

ENGINE NUMBERS
2200-2254

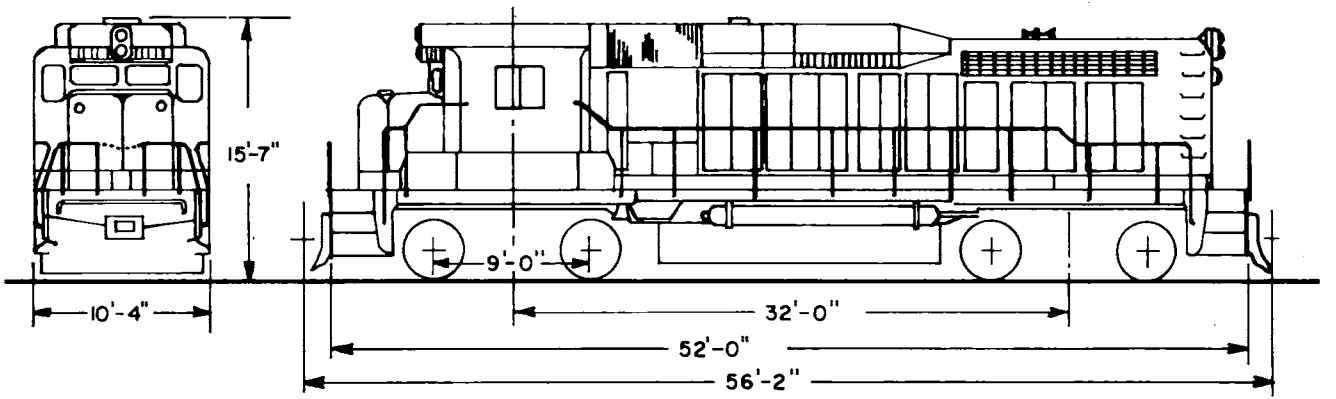

DEISEL ENGINE MODEL . . . 16-567D3 TRANSITION . . . . . AUTOMATIC M.U. CONTROL . . . . . EQUIPPED SPEED RECORDER . . . MECH. BARCO SAFETY CONTROL . . . FOOT PEDAL UNITS 2200-2203, 2017-2232 ONLY CONT. RATED SPEED . . . . . 12 MPH MAX. SPEED . . . . . 66 MPH	AIR BRAKE CYLS. . . . . 9"x8" JOURNALS. . . .HY.RB. . 6-7/8"x12" GEAR RATIO . . . . . .15:62 DRAFT GEAR . . . . . M-381 COUPLER . . . (AL.CONT.). . . . . "E"	BATTERY CAPY. . . . . 64V. 420 AMP. HR. COOLING SYSTEM . . . . . 251 GALS. LUB.OIL CAPY. . . . . 243 GALS. SAND CAPY. . . . . 46 CU. FT. UNITS 2217-254 . . . . . 18 CU. FT. TOILET . . . . . EQUIPPED	NOTES:

E.M.D. GP-35 – 2500 H.P. LOCOMOTIVE

B.N. ENG. NUMBER	MAIN GEN.	ALTERNAT.	AUX. GEN.	TRACTION MOTOR	TOTAL WEIGHT	TRACTIVE EFFORT	DYNAMIC BRAKE	AIR BRAKE	AIR COMPRESS.	FUEL CAPY.			
2500-2523	D-32	D-14	10 KW	D-67	262,213 LBS.	51,200 LBS.	POTENTIAL	26 L	WBO	2600 GALS.			
2524-2545	D-32	D-14	10 KW	D-67	262,213 LBS.	51,200 LBS.	POTENTIAL	26 L	WBG	2600 GALS.			

E.M.D. GP-35 – 2500 H.P. LOCOMOTIVE

ENGINE NUMBERS
2500-2545

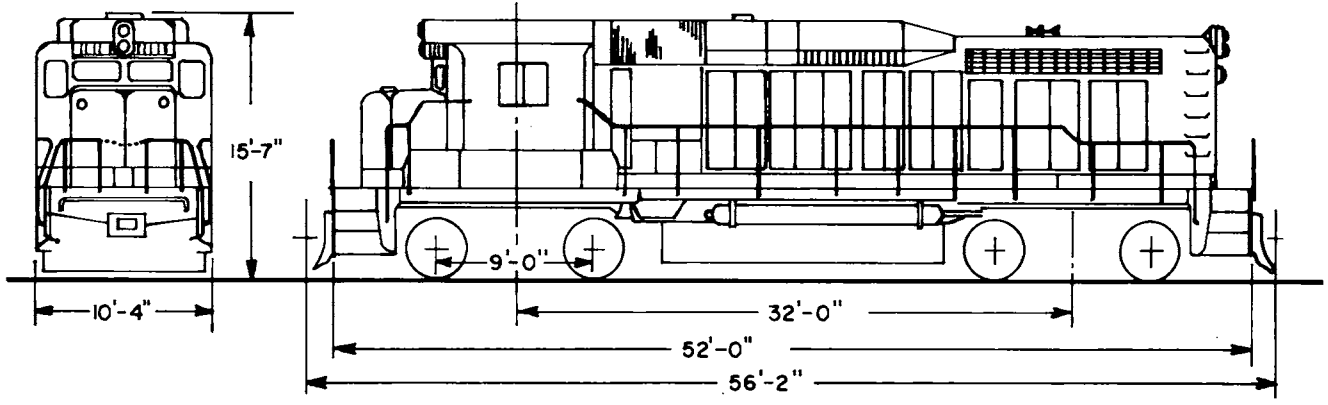

DIESEL ENGINE MODEL . . . 16-567D3 TRANSITION . . . . . AUTOMATIC M.U. CONTROL . . . . . EQUIPPED SPEED RECORDER . . . MECH. BARCO SAFETY CONTROL . . . FOOT PEDAL CONT. RATED SPEED . . . . . 12 MPH MAX. SPEED . . . . . 66 MPH	AIR BRAKE CYLS. . . . . 9"x8" JOURNAL . .HY.RB. . . . 6-7/8"x12" GEAR RATIO . . . . . .15:62 DRAFT GEAR . . . . . M-381 COUPLER . . (AL.CONT.) . . . . . "E"	BATTERY CAPY. . . . . 64V. 420 AMP. HR. COOLING SYSTEM . . . . . 251 GALS. LUB.OIL CAPY. . . . . 243 GALS. SAND CAPY. . . . . 18 CU. FT. SEARCH HARNESS . UNITS 2500-2511 TOILET . . . . . EQUIPPED	NOTES:

E.M.D. GP-38 – 2000 H.P. LOCOMOTIVE

B.N. ENG. NUMBER	MAIN GEN.	ALTERNAT.	AUX. GEN.	TRACTION MOTOR	TOTAL WEIGHT	TRACTIVE EFFORT	DYNAMIC BRAKE	AIR BRAKE	AIR COMPRESS.	FUEL CAPY.			
2072-2077	D-32	D-14	10 KW	D-47	265-320 LBS.	55,000 LBS.	POTENTIAL	26 L	WBO	3200 GALS.			

E.M.D. GP-38 – 2000 H.P. LOCOMOTIVE

ENGINE NUMBERS
2072-2077

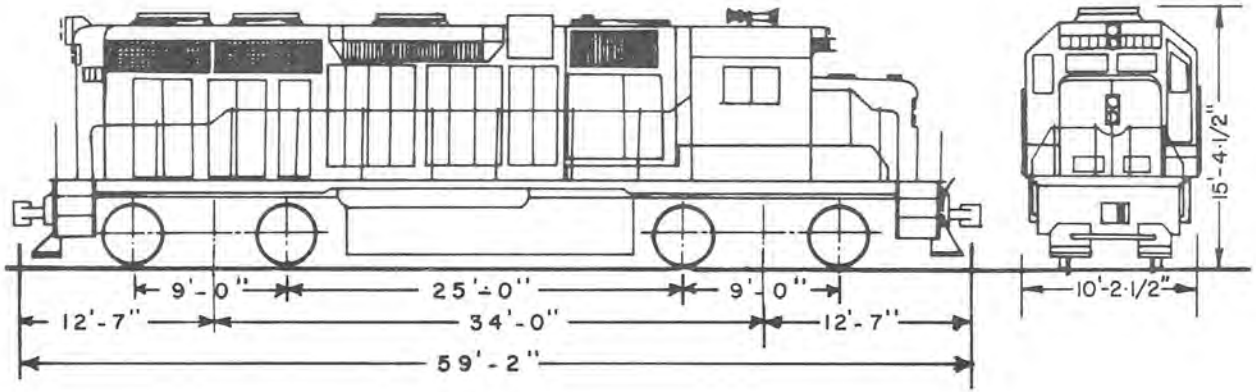

DIESEL ENGINE MODEL 16-645E	AIR BRAKE CYLS. . . . . 9"x8"	BATTERY	NOTES:
TRANSITION . . . . . AUTOMATIC	JOURNALS. . . HY.RB. . 6-7/8"x12"	CAPY. . . . . 64V. 420 AMP. HR.	
M.U. CONTROL . . . . . EQUIPPED	GEAR RATIO 15:62	COOLING SYSTEM . . . . . 254 GALS.	
SPEED RECORDER . CHI. PNEUMATIC	DRAFT GEAR M-381	LUB.OIL CAPY. . . . . 243 GALS	
SAFETY CONTROL . . . FOOT PEDAL	COUPLER . . . (AL.CONT.). . . "E"	SAND CAPY. . . . . 56 CU. FT.	
CONT. RATED SPEED . . . . . 10.7 MPH			
MAX. SPEED . . . . . 66 MPH		TOILET . . . . . EQUIPPED	

E.M.D. GP-38-2 – 2000 H.P. LOCOMOTIVE

B.N. ENG. NUMBER	MAIN GEN.	ALTERNAT.	AUX. GEN.	TRACTION MOTOR	TOTAL WEIGHT	TRACTIVE EFFORT	DYNAMIC BRAKE	AIR BRAKE	AIR COMPRESS.	FUEL CAPY.			
2078-2087	AR-10	D-14	10 KW	D-77	262,880 LBS.	55,000 LBS.	POTENTIAL	26 L	WBG	3600 GALS.			
2088-2109	AR-10	D-14	10 KW	D-77	266,680 LBS.	55,000 LBS.	POTENTIAL	26 L	WBG	3600 GALS.			

E.M.D. GP-38-2 – 2000 H.P. LOCOMOTIVE

ENGINE NUMBERS
2078-2109

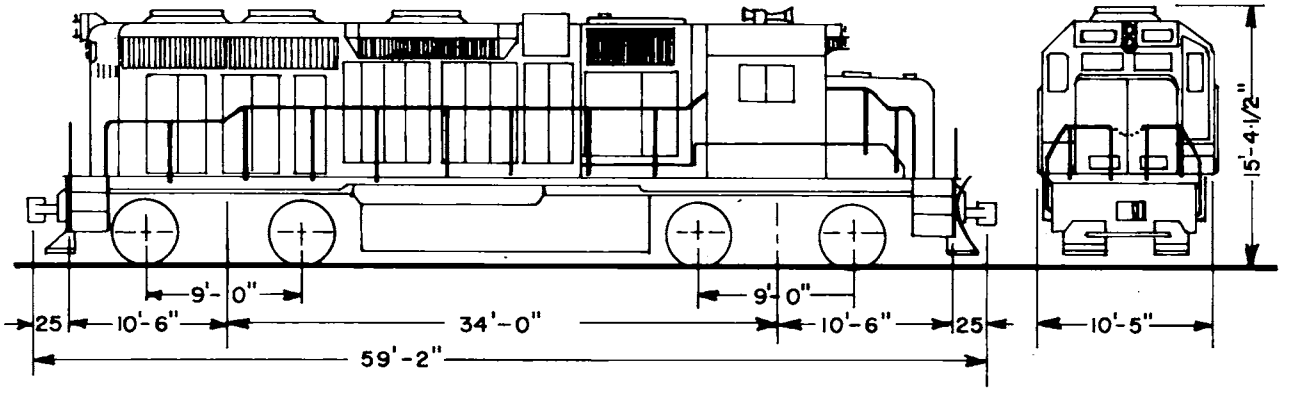

DIESEL ENGINE MODEL 16-645E	AIR BRAKE CYLS. . . . . 9"x8"	BATTERY CAPY. . 64V. 420 AMP. HR.	NOTES:
TRANSITION . . . . . AUTOMATIC	JOURNALS . . . HY.RB. . . 6-7/8"x12"	COOLING SYSTEM . . . . . 254 GALS.	PACESETTER–LEAD
M.U. CONTROL . . . . . EQUIPPED	GEAR RATIO 15:62	LUB.OIL CAPY. . . . . 243 GALS.	2100-2105
SPEED RECORDER . . . MECH. BARCO	DRAFT GEAR . . . . . NC 390	SAND CAPY. . . . . 56 CU. FT.	
SAFETY CONTROL . . . FOOT PEDAL	COUPLER TYPE (AL. CONT.) . . . "F"		
CONT. RATED SPEED . . . . . 10.7 MPH			
MAX. SPEED . . . . . 66 MPH		TOILET . . . . . EQUIPPED	

E.M.D. GP-40 – 3000 H.P. LOCOMOTIVE

B.N. ENG. NUMBER	MAIN GEN.	ALTERNAT.	AUX. GEN.	TRACTION MOTOR	TOTAL WEIGHT	TRACTIVE EFFORT	DYNAMIC BRAKE	AIR BRAKE	AIR COMPRESS.	FUEL CAPY.			
3000-3019	AR-10A	D-14	10 KW	D-77	274,813 LBS.	48,000 LBS.	POTENTIAL	26 L	WBG	3600 GALS.			
3020-3039	AR-10A2	D-14	10 KW	D-77	274,813 LBS.	48,000 LBS.	POTENTIAL	26 L	WBG	3600 GALS.			

E.M.D. GP-40 — 3000 H.P. LOCOMOTIVE

ENGINE NUMBERS
3000-3039

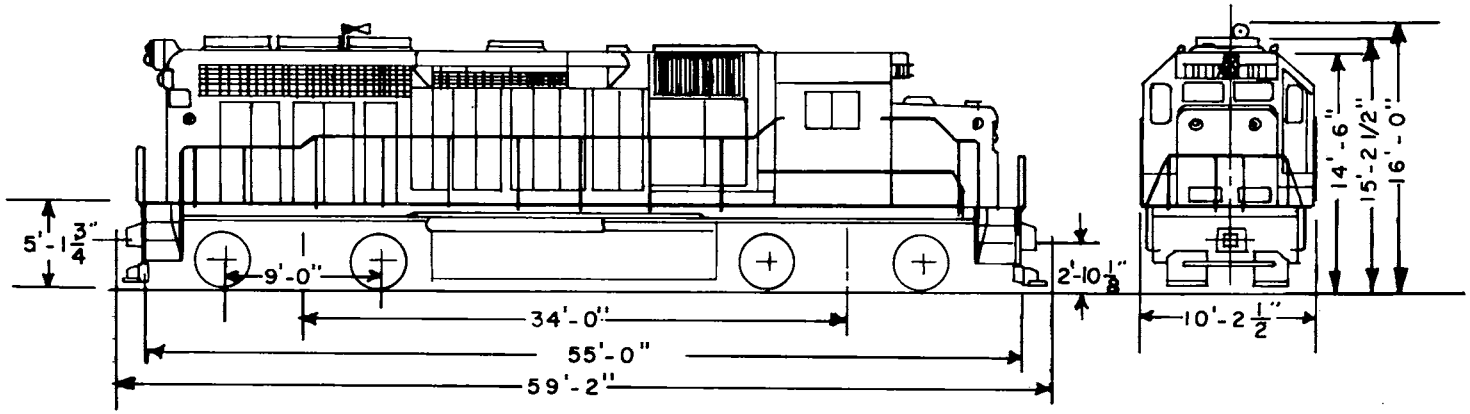

DIESEL ENGINE MODEL . . . 16-645E3	AIR BRAKE CYLS. . . . . 9"x8"	BATTERY	NOTES:
TRANSITION . . . . . AUTOMATIC	JOURNALS . . . .HY.RB. . 6-7/8"x12"	CAPY. . . . . 64V. 420 AMP. HR.	
M.U. CONTROL . . . . . EQUIPPED	GEAR RATIO 17: 60	COOLING SYSTEM . . . . . 254 GALS.	
SPEED RECORDER . . . . . BARCO	DRAFT GEAR M-381	LUB.OIL CAPY. . . . . 243 GALS.	
SAFETY CONTROL . . .FOOT PEDAL	COUPLER . . . .(AL.CONT.). . . . "E"	SAND CAPY. . . . . 56 CU. FT.	
		SEARCH HARNESS . . . . . EQUIPPED	
CONT. RATED SPEED . . . . . 13 MPH			
MAX. SPEED . . . . . 77 MPH		TOILET . . . . . EQUIPPED	

E.M.D. SD-7 – 1500 H.P. LOCOMOTIVE

B.N. ENG. NUMBER	MAIN GEN.	ALTERNAT.	AUX. GEN.	TRACTION MOTOR	TOTAL WEIGHT	TRACTIVE EFFORT	DYNAMIC BRAKE	AIR BRAKE	AIR COMPRESS.	FUEL CAPY.			
6000-6022	D-12	D-14	10 KW	D-27	343,720 LBS.	67,000 LBS.	NONE	24 RL	WXG	2400 GALS.			
6023-6047	D-12-C	D-14	18 KW	D-27	321,590 LBS.	67,000 LBS.	FIELD LOOP	6-BLQ	WXG	2400 GALS.			
6048-6059	D-12-C	D-14	18 KW	D-27	297,873 LBS.	67,000 LBS.	NONE	6-BLQ	WXG	2400 GALS.			
CS 810-819	D-12	D-14	18 KW	D-27	316,300 LBS.	67,000 LBS.	FIELD LOOP	24 RL	WXG	1200 GALS.			
FWD 850-859	D-12	D-14	18 KW	D-27	316,300 LBS.	67,000 LBS.	FIELD LOOP	24 RL	WXG	1200 GALS.			

E.M.D. SD-7 — 1500 H.P. LOCOMOTIVE

ENGINE NUMBERS
6000-6059, CS 810-819
FWD 850-859

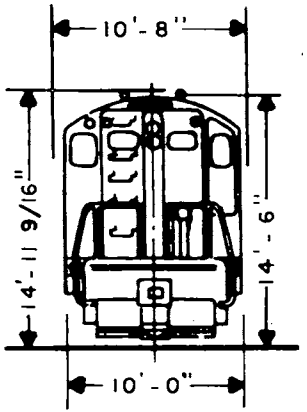

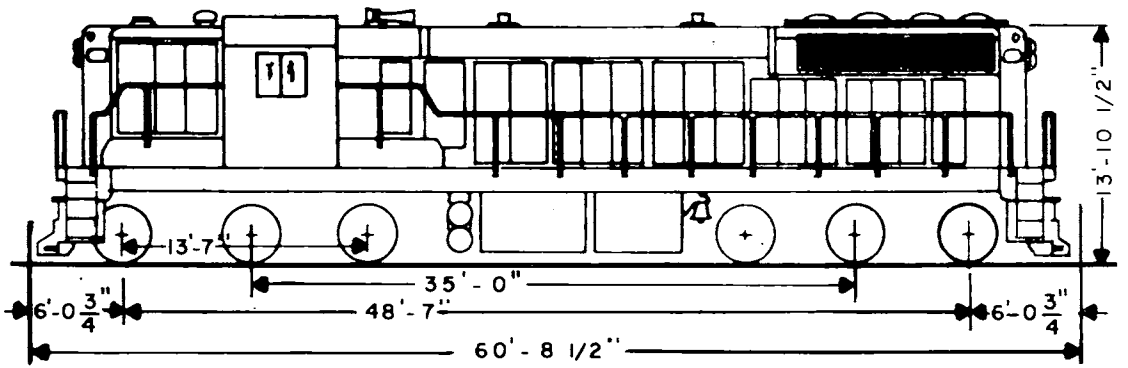

DIESEL ENGINE MODEL 16-567B
TRANSITION . . . . . AUTOMATIC
M.U. CONTROL . . . . . EQUIPPED
SPEED RECORDER . . . . . BARCO
UNITS6010-6023 . CHI.PNEUMATIC
SAFETY CONTROL . . . FOOT PEDAL
CONT. RATED SPEED . . . . . 6 MPH
MAX. SPEED . . . . . 66 MPH

AIR BRAKE CYLS. . . . . 9"x8"
JOURNALS . . . .HY.RB. . 6-7/8"x12"
GEAR RATIO 15:62
DRAFT GEAR M-380
COUPLER . . . . . "E"
DUEL CONTROL UNITS 6023-6059
FWD UNITS 850-860
CS UNITS 810-812, 814-819

BATTERY
CAPY. . . . . 64V. 426 AMP. HR.
COOLING SYSTEM . . . . . 260 GALS.
LUB.OIL CAPY. . . . . 200 GALS.
SAND CAPY. . . . . 50 CU. FT.

TOILET . . . . . EQUIPPED

NOTES:
PACESETTER

Lead	Trail
6000-6001	6023-6024
6025-6026	6027
6028-6030	6031
6032	6033-6035
6036	6037-6039
6040	6041
6042-6043	6045-6047

E.M.D. SD-9 – 1750 H.P. LOCOMOTIVE

B.N. ENG. NUMBER	MAIN GEN.	ALTERNAT.	AUX. GEN.	TRACTION MOTOR	TOTAL WEIGHT	TRACTIVE EFFORT	DYNAMIC BRAKE	AIR BRAKE	AIR COMPRESS.	FUEL CAPY.			
6100-6124	D-12	D-14	10 KW	D-27	345,965 LBS.	67,500 LBS.	NONE	24 RL	WXG	2400 GALS.			
6125-6126	D-12	D-14	10 KW	D-27	345,965 LBS.	67,500 LBS.	POTENTIAL	24 RL	WXG	2400 GALS.			
6127-6176	D-12-C	D-14	18 KW	D-27	325,683 LBS.	67,500 LBS.	FIELD LOOP	6 BLQ	WXG	2400 GALS.			
6177-6206	D-12-C	D-14	18 KW	D-27	316,133 LBS.	67,500 LBS.	FIELD LOOP	6 BLQ	WXG	1200 GALS.			
C & S 820-842	D-12	D-14	18 KW	D-27	325-683 LBS.	67,500 LBS.	FIELD LOOP	24 RL	WXG	2400 GALS.			

E.M.D. SD-9 – 1750 H.P. LOCOMOTIVE

ENGINE NUMBERS
6100-6206, CS 820-842

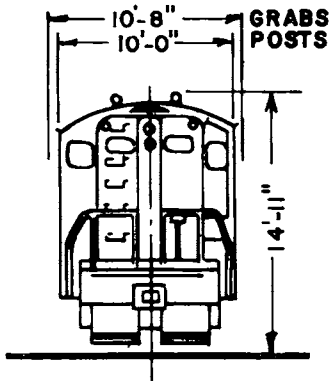

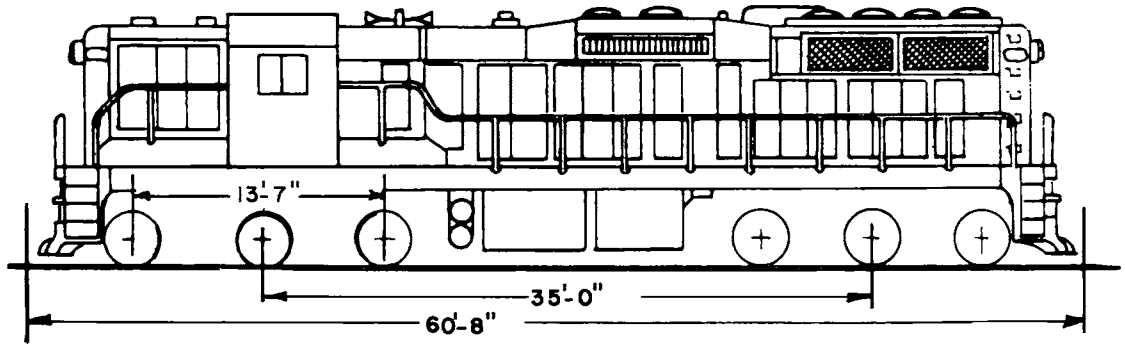

DIESEL ENGINE MODEL 16-567C
TRANSITION . . . . . AUTOMATIC
M.U. CONTROL . . . . . EQUIPPED
SPEED RECORDER . . . MECH.BARCO
SAFETY CONTROL . . . FOOT PEDAL

CONT. RATED SPEED . . . . . 8 MPH
MAX. SPEED . . . . . 66 MPH

AIR BRAKE CYLS. . . . . 9"x8"
JOURNALS . . . .HY.RB. . 6-7/8"x12"
GEAR RATIO 15:62
DRAFT GEAR M-380
COUPLER . . . . . "E"
DUAL CONTROL . . UNITS 6127-6186
CS UNITS 820-842

BATTERY
CAPY. . . . . 64V. 426 AMP. HR.
COOLING SYSTEM . . . . . 260 GALS.
LUB.OIL CAPY. . . . . 200 GALS.
SAND CAPY. . . . . 50 CU. FT.

TOILET . . . . . EQUIPPED

NOTES:

HUMP CONTROL
6105, 6116, 6124, 6133, 6191
6197, 6206, 6240-6243

E.M.D. SD-24 – 2400 H.P. LOCOMOTIVE

B.N. ENG. NUMBER	MAIN GEN.	ALTERNAT.	AUX. GEN.	TRACTION MOTOR	TOTAL WEIGHT	TRACTIVE EFFORT	DYNAMIC BRAKE	AIR BRAKE	AIR COMPRESS.	FUEL CAPY.			
6240	D-22	D-14	10 KW	D-47	346,413 LBS.	61,800 LBS.	POTENTIAL	26 L	WBG	3000 GALS.			
6241	D-22	D-14	10 KW	D-47	346,413 LBS.	68,150 LBS.	POTENTIAL	26 L	WBG	3000 GALS.			
6242	D-22	D-14	10 KW	D-47	346,413 LBS.	61,800 LBS.	POTENTIAL	26 L	WBG	3000 GALS.			
6243	D-22	D-14	10 KW	D-47	346,413 LBS.	68,150 LBS.	POTENTIAL	26 L	WBG	3000 GALS.			
6244	D-22	D-14	10 KW	D-47	346,413 LBS.	61,800 LBS.	POTENTIAL	26 L	WBG	3000 GALS.			
6245-6250	D-22	D-14	10 KW	D-47	346,413 LBS.	68,150 LBS.	POTENTIAL	26 L	WBG	3000 GALS.			
6251-6252	D-22	D-14	10 KW	D-47	346,413 LBS.	61,800 LBS.	POTENTIAL	26 L	WBG	3000 GALS.			
6253	D-22	D-14	10 KW	D-47	346,413 LBS.	68,150 LBS.	POTENTIAL	26 L	WBG	3000 GALS.			
6254-6255	D-22	D-14	10 KW	D-47	346,413 LBS.	61,800 LBS.	POTENTIAL	26 L	WBG	3000 GALS.			

E.M.D. SD-24 – 2400 H.P. LOCOMOTIVE

ENGINE NUMBERS
6240-6255

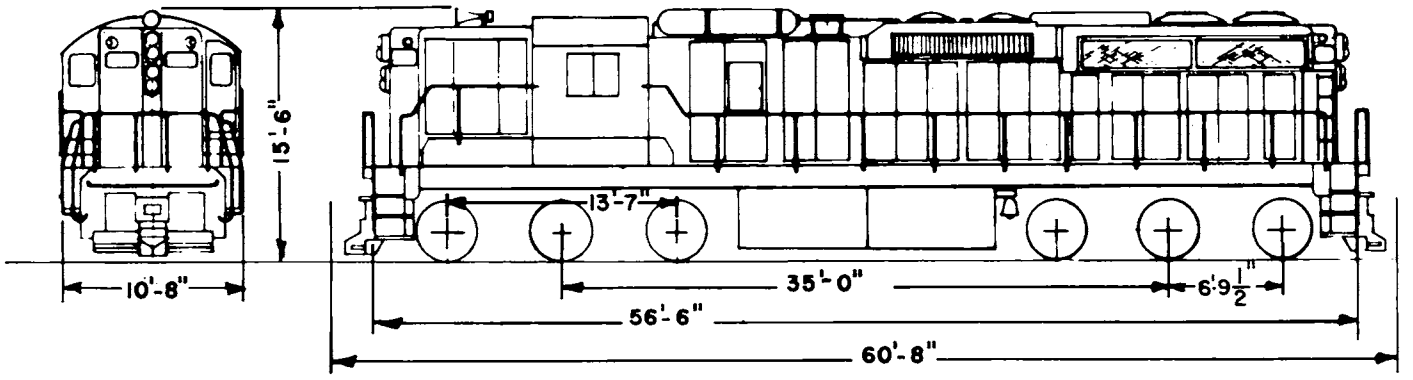

DIESEL ENGINE MODEL 16-567D	AIR BRAKE CYLS. . . . . 9"x8"	BATTERY	NOTES:
TRANSITION . . . . . AUTOMATIC	JOURNALS . . . HY.RB. . 6-7/8"x12"	CAPY. . . . . 64V. 420 AMP. HR.	
M.U. CONTROL . . . . . EQUIPPED	UNITS 6240,6242,6244	COOLING SYSTEM . . . . . 260 GALS.	
SPEED RECORDER . . . . . BARCO	6251-6252,	LUB.OIL CAPY. . . . . 220 GALS.	
SAFETY CONTROL . . . . . NONE	6254-6255 . . . . . 6½"x12"	SAND CAPY. . . . . 48 CU. FT.	
CONT. RATED SPEED	GEAR RATIO 15:62		
15:62 . . . . . 10 MPH	UNITS 6240,6242,6244		
CONT. RATED SPEED	6251-6252,		
17:60 . . . . . .11.5 MPH	6254-6255 . . . . . .17:60		
MAX. SPEED . . . . . 66 MPH	DRAFT GEAR M-380		
	COUPLER . . . . . "E"	TOILET . . . . . EQUIPPED	

E.M.D. SD-40 – 3000 H.P. LOCOMOTIVE

B.N. ENG. NUMBER	MAIN GEN.	ALTERNAT.	AUX. GEN.	TRACTION MOTOR	TOTAL WEIGHT	TRACTIVE EFFORT	DYNAMIC BRAKE	AIR BRAKE	AIR COMPRESS.	FUEL CAPY.			
6300-6324	ARIO	D-14	10 KW	D-77	381,900 LBS.	74,500 LBS.	POTENTIAL	26 L	WBG	4000 GALS.			
C & S													
875-878	AR-10	D-14	10 KW	D-77	382,013 LBS.	71,000 LBS.	POTENTIAL	26 L	WBG	4000 GALS.			
879-887	AR-10	D-14	10 KW	D-77	383,846 LBS.	71,000 LBS.	POTENTIAL	26 L	WBG	4000 GALS.			

E.M.D. SD-40 – 3000 H.P. LOCOMOTIVE

ENGINE NUMBERS
6300-6324, CS 875-887

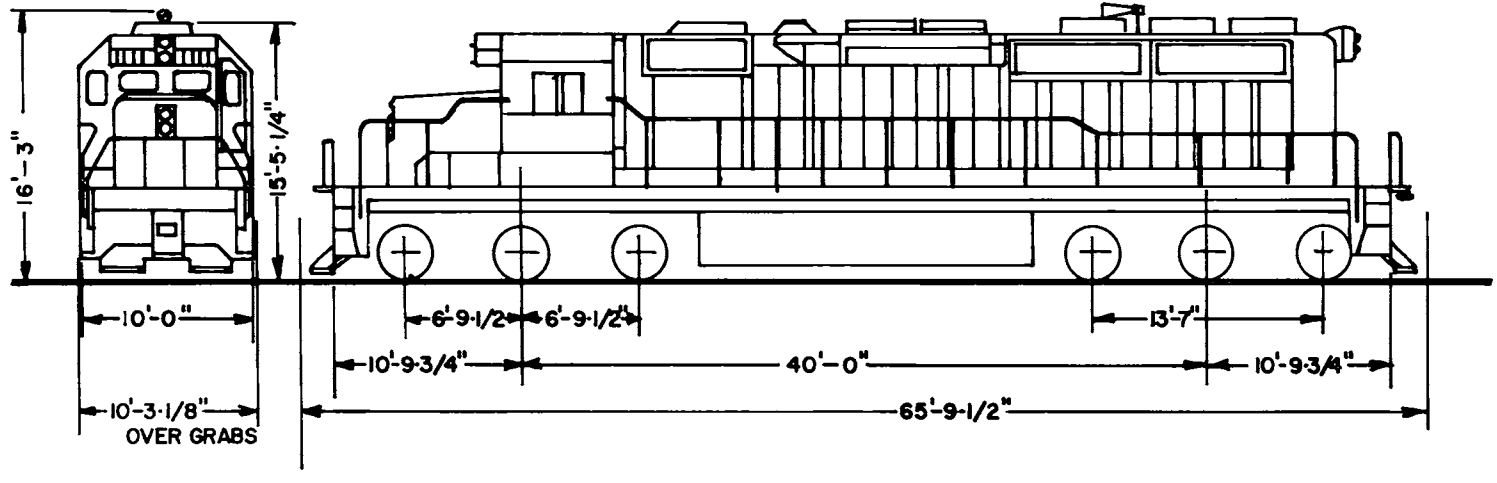

DIESEL ENGINE MODEL . . . 16-645E3
TRANSITION . . . . . AUTOMATIC
M.U. CONTROL . . . . . EQUIPPED
SPEED RECORDER . . . MECH. BARCO
SAFETY CONTROL . . . FOOT PEDAL

CONT. RATED SPEED . . . . . 9 MPH
CS UNITS 875-887 . . . . . 13 MPH
MAX. SPEED . . . . . 77 MPH

AIR BRAKE CYLS. . . . . 9"x8"
JOURNALS . . . .HY.RB. . .6-7/8"x12"
GEAR RATIO 60:17
DRAFT GEAR NC-390
CS UNITS 875-887 . . . . . M-381
COUPLER . . . (AL.CONT.) . . . . "F"
CS UNITS 875-887 . . . . . "E"

BATTERY
CAPY. . . . . 64V. 420 AMP. HR.
COOLING SYSTEM . . . . . 254 GALS.
LUB.OIL CAPY. . . . . 243 GALS.
SAND CAPY. . . . . 56 CU. FT.
SEARCH HARNESS . UNITS 6300-6324

TOILET . . . . . EQUIPPED

NOTES:

E.M.D. SDP-40 — 3000 H.P. LOCOMOTIVE

B.N. ENG. NUMBER	MAIN GEN.	ALTERNAT.	AUX. GEN.	TRACTION MOTOR	TOTAL WEIGHT	TRACTIVE EFFORT	DYNAMIC BRAKE	AIR BRAKE	AIR COMPRESS.	FUEL CAPY.			
6394-6399	AR-10	D-14	18 KW	D-77	370,700 LBS.	71,000 LBS.	POTENTIAL	26 L	WBO	3950 GALS.			

E.M.D. SDP-40 – 3000 H.P. LOCOMOTIVE

ENGINE NUMBERS
6394 - 6399

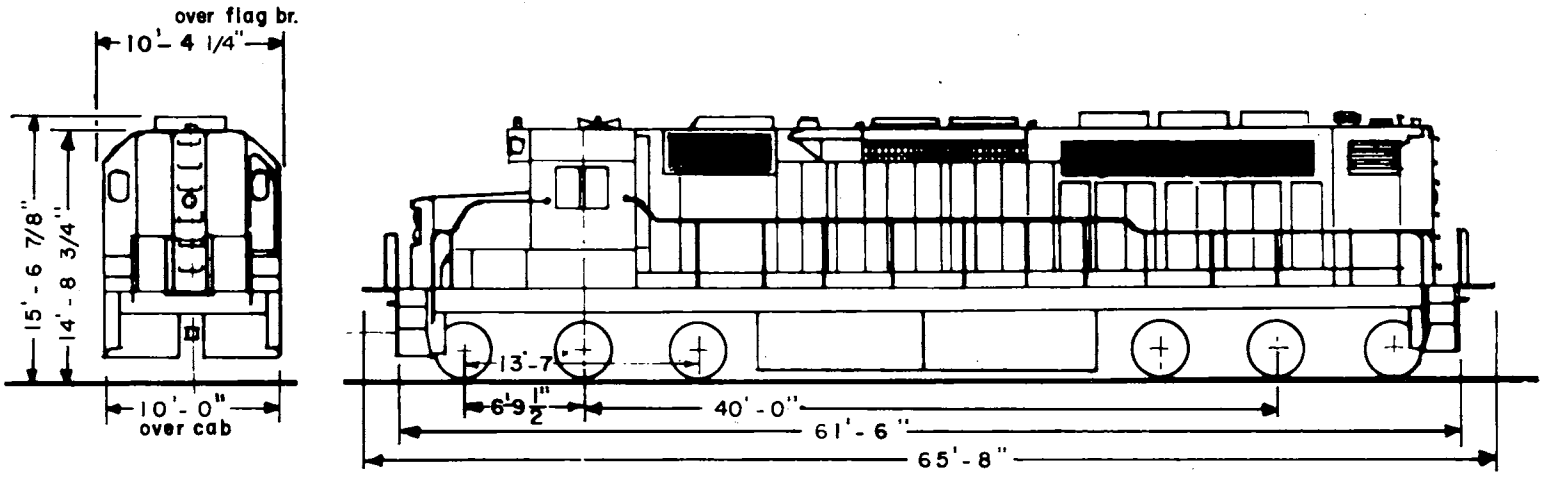

DIESEL ENGINE MODEL . . . 16-645E3	AIR BRAKE CYLS. . . . . 6"x12"	BATTERY	NOTES:
TRANSITION . . . . . AUTOMATIC	JOURNALS . . . HY.RB. . . . 6½"x12"	CAPY. . . . . 64V. 420 AMP. HR.	
M.U. CONTROL . . . . . EQUIPPED	GEAR RATIO 17:60	COOLING SYSTEM . . . . . 254 GALS.	
SPEED RECORDER . . . . . BARCO	DRAFT GEAR M-380	LUB.OIL CAPY. . . . . 243 GALS.	
SAFETY CONTROL . . .FOOT PEDAL	COUPLER . . . .(AL.CONT.). . . . . "F"	SAND CAPY. . . . . 56 CU. FT.	
		SEARCH HARNESS . UNITS 6394-6399	
CONT. RATED SPEED . . . . . 13 MPH		TOILET . . . . . EQUIPPED	
MAX. SPEED . . . . . 77 MPH			

E.M.D. SD-40-2 – 3000 H.P. LOCOMOTIVE

B.N. ENG. NUMBER	MAIN GEN.	ALTERNAT.	AUX. GEN.	TRACTION MOTOR	TOTAL WEIGHT	TRACTIVE EFFORT	DYNAMIC BRAKE	AIR BRAKE	AIR COMPRESS.	FUEL CAPY.			
6326-6334	AR-10	D-14	10 KW	D-77	384,360 LBS.	74,500 LBS.	POTENTIAL	26 L	WBG	4000 GALS.			
6376-6385	AR-10	D-14	10 KW	D-77	381,493 LBS.	74,500 LBS.	POTENTIAL	26 L	WBG	4000 GALS.			
6700-6752	AR-10	D-14	10 KW	D-77	412,883 LBS. AV. WT.	84,000 LBS.	POTENTIAL	26 L	WBG	4000 GALS.			
6753-6772	AR-10	D-14	18 KW	D-77	413,760 LBS.	84,000 LBS.	POTENTIAL	26 L	WBO	4000 GALS.			
6800-6823	AR-10	D-14	10 KW	D-77	382,333 LBS.	74,500 LBS.	POTENTIAL	26 L	WBG	4000 GALS.			
6824-6836	AR-10	D-14	10 KW	D-77	379,700 LBS.	74,500 LBS.	POTENTIAL	26 L	WBG	4000 GALS.			
6900-6916	AR-10	D-14	10 KW	D-77	382,333 LBS.	74,500 LBS.	POTENTIAL	26 L	WBG	4000 GALS.			
6917-6928	AR-10	D-14	10 KW	D-77	379,000 LBS.	74,500 LBS.	POTENTIAL	26 L	WBG	4000 GALS.			
1876	AR-10	D-14	10 KW	D-77	384,360 LBS.	74,500 LBS.	POTENTIAL	26 L	WBG	4000 GALS.			
C & S													
900-917	AR-10	D-14	10 KW	D-77	382,047 LBS.	74,500 LBS.	POTENTIAL	26 L	WBG	4000 GALS.			
918-925	AR-10	D-14	10 KW	D-77	385,740 LBS.	74,500 LBS.	POTENTIAL	26 L	WBG	4000 GALS.			
950-959	AR-10	D-14	10 KW	D-77	412,840 LBS.	84,000 LBS.	POTENTIAL	26 L	WBG	4000 GALS.			
980	AR-10	D-14	10 KW	D-77	385,740 LBS.	74,500 LBS.	POTENTIAL	26 L	WBG	4000 GALS.			
996	AR-10	D-14	10 KW	D-77	385,740 LBS.	74,500 LBS.	POTENTIAL	26 L	WBG	4000 GALS.			

E.M.D. SD-40-2 – 3000 H.P. LOCOMOTIVE

ENGINE NUMBERS
6326-6334, 6376-6385, 6700-6772
6800-6836, 6900-6928, 1876
CS 900-925, CS 950-959
CS 980-996

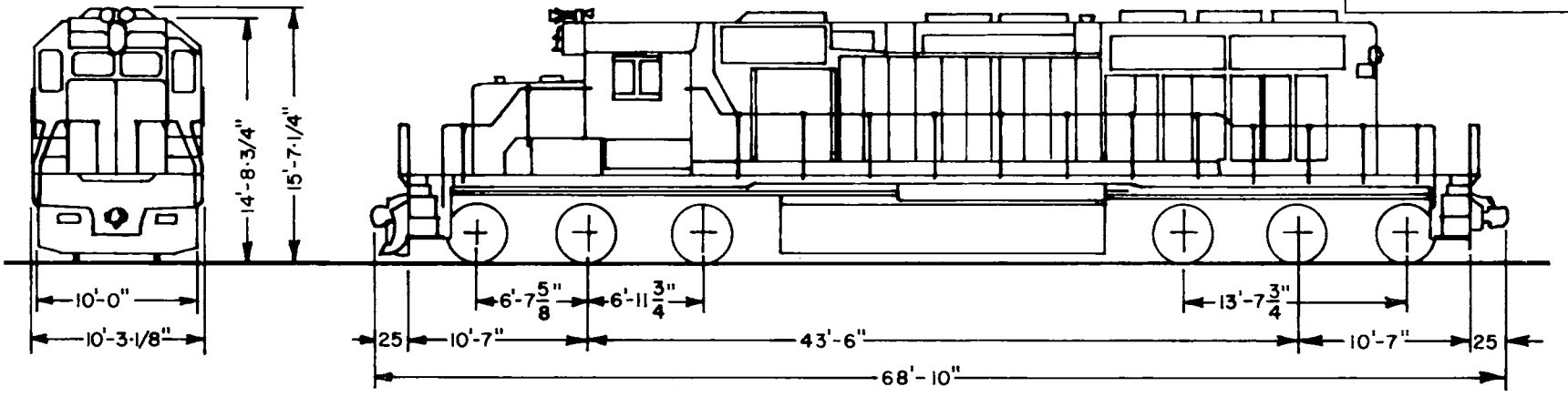

DIESEL ENGINE MODEL . . 16-645E3
TRANSITION . . . . . AUTOMATIC
M. U. CONTROL . . . . . EQUIPPED
SPEED RECORDER . . . . . BARCO
SAFETY CONTROL . . FOOT PEDAL

CONT. RATED SPEED . . . . . 8.5 MPH
MAX. SPEED (17:60) . . . . . 77 MPH
MAX. SPEED (15:62) . . . . . 66 MPH

AIR BRAKE CYLS. . . . . 9"x8"
JOURNALS . . . HY. RIB. .6-7/8"x12"
GEAR RATIO 17:60
6700-6772, CS 950-959 . . . . .15:62
DRAFT GEAR . . . . . NC 390
COUPLER . . (AL. CONT.) . . . . . "F"

AC AUX. GENS.–18KW
6800-6804
6829-6836
6917-6928

BATTERY
CAPY. . . . . 64V. 420 AMP. HR.
COOLING SYSTEM . . . . . 254 GALS.
LUB. OIL CAPY. . . . . 243 GALS.
SAND CAPY. . . . . 56 CU. FT.
SEARCH HARNESS UNITS 6325-6334
6800-6836, 6900-6928,
CS918-925, CS980,996
TOILET . . . . . EQUIPPED

MASTER LOCOTROL UNITS
6800-6836, CS-980
REMOTE LOCOTROL UNITS
6900-6928, CS996
BATTERY TRAINLINE . . 6800-6823
PACESETTER–LEAD
6708-6727, 6753-6762, 6824-6836
PACESETTER–TRAIL
6700-6707, 6728-6752, 6763-6772,
6917-6928, CS 950-959

E.M.D. SD-45 – 3600 H.P. LOCOMOTIVE

B.N. ENG. NUMBER	MAIN GEN.	ALTERNAT.	AUX. GEN.	TRACTION MOTOR	TOTAL WEIGHT	TRACTIVE EFFORT	DYNAMIC BRAKE	AIR BRAKE	AIR COMPRESS.	FUEL CAPY.			
6400-6419	AR-10-B	D-14	10 KW	D-77	391,300 LBS.	82,000 LBS.	POTENTIAL	26 L	WBO	4000 GALS.			
6420-6429	AR-10-B2	D-14	10 KW	D-77	394,022 LBS.	71,000 LBS.	POTENTIAL	26 L	WBO	4000 GALS.			
6430-6437	AR-10	D-14	10 KW	D-77	369,340 LBS.	71,000 LBS.	POTENTIAL	26 L	WBO	4000 GALS.			
6438-6447	AR-10	D-14	10 KW	D-77	369,340 LBS.	71,000 LBS.	POTENTIAL	26 L	WBG	4000 GALS.			
6448-6456	AR-10	D-14	10 KW	D-77	384,200 LBS.	71,000 LBS.	POTENTIAL	26 L	WBG	4000 GALS.			
6457-6471	AR-10	D-14	10 KW	D-77	386,140 LBS.	74,200 LBS.	POTENTIAL	26 L	WBG	4000 GALS.			
6472-6491	AR-10	D-14	10 KW	D-77	373,560 LBS.	71,000 LBS.	POTENTIAL	26 L	WBG	4000 GALS.			
6492-6497	AR-10	D-14	10 KW	D-77	376,960 LBS.	71,000 LBS.	POTENTIAL	26 L	WBG	4000 GALS.			
6498-6542	AR-10	D-14	10 KW	D-77	376,140 LBS.	71,000 LBS.	POTENTIAL	26 L	WBG	4000 GALS.			
6543-6567	AR-10	D-14	10 KW	D-77	386,140 LBS.	71,000 LBS.	POTENTIAL	26 L	WBG	4000 GALS.			
CS													
868-874	AR-10	D-14	10 KW	D-77	386,253 LBS.	74,200 LBS.	POTENTIAL	26 L	WBG	4000 GALS.			

E.M.D. SD-45 — 3600 H.P. LOCOMOTIVE

ENGINE NUMBERS
6400-6567, CS 868-874

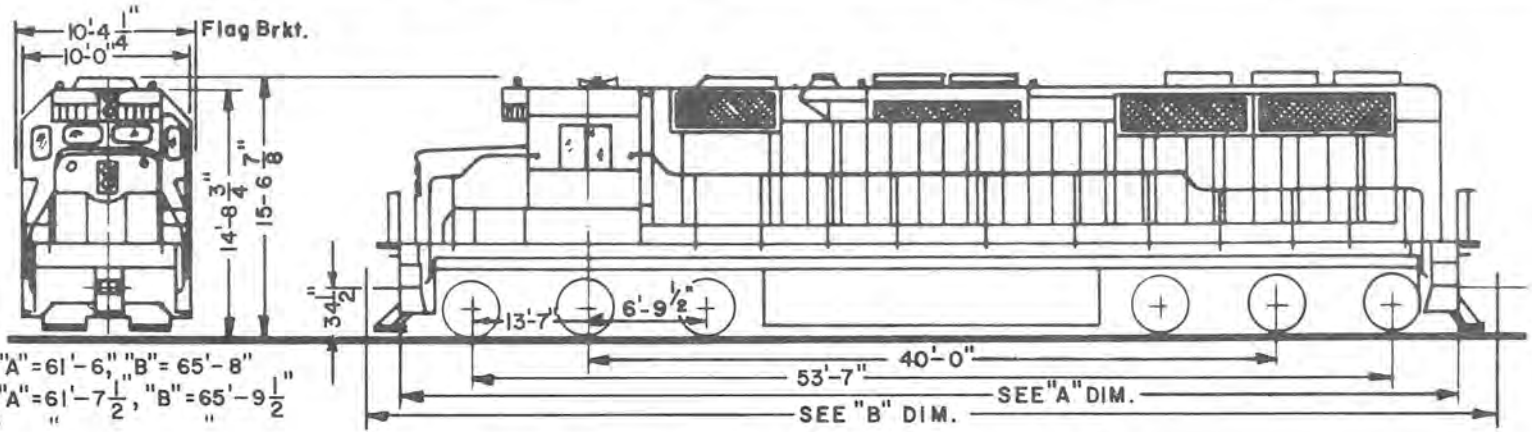

6400-6456--"A"=61'-6", "B"= 65'-8"
6457-6567--"A"=61'-7 1/2", "B"=65'-9 1/2"
C&S 868-874 " "

DIESEL ENGINE MODEL . . . 20-645E3	AIR BRAKE CYLS. . . . . 9"x8"	BATTERY CAPY. . . . 64V. 420 AMP.HR.	NOTES:
TRANSITION . . . . . AUTOMATIC	UNITS 6400-6419 . . . . . 6"x12"	UNITS 6420-6429 . 64V. 460 AMP.HR.	
M.U. CONTROL . . . . . EQUIPPED	UNITS 6404-6419	COOLING SYSTEM . . . . . 288 GALS.	
SPEED RECORDER . . . . . BARCO	6438, 6447 . . . . . 9"x10"	LUB.OIL CAPY. . . . . 294 GALS.	
UNITS 6400-6426 CHI.PNEUMATIC	JOURNALS . . . . . .6-7/8"x12"	UNITS 6400-6403 . . . . . 466 GALS.	
SAFETY CONTROL . . . FOOT PEDAL	GEAR RATIO 17:60	SAND CAPY. . . . . 56 CU. FT.	
CONT. RATED SPEED . . . . . 9 MPH	UNITS 6400-6429 . . . . . .15:62	SEARCH	
UNITS 6400-6429 . . . . . .8.5 MPH	DRAFT GEAR M-380	HARNESS . . BN UNITS EQUIPPED	
UNITS 6430-6456,	UNITS 6400-6429,		
6472-6542 . . . . . .13.2 MPH	6457-6471 . . . . . M-381		
MAX. SPEED . . .(15:62) . . . . 66 MPH	COUPLER . . . . .(AL.CONT.) . . . "F"	TOILET . . . . . EQUIPPED	
(17:60) . . . . . 77 MPH	UNITS 6400-6429,6457-6471 "E"		

E.M.D. SDP-45 – 3600 H.P. LOCOMOTIVE

B.N. ENG. NUMBER	MAIN GEN.	ALTERNAT.	AUX. GEN.	TRACTION MOTOR	TOTAL WEIGHT	TRACTIVE EFFORT	DYNAMIC BRAKE	AIR BRAKE	AIR COMPRESS.	FUEL CAPY.			
6592-6599	AR-10	D-14	18 KW	D-77	395,600 LBS.	71,000 LBS.	POTENTIAL	26 L	WBG	4950 GALS.			

E.M.D. SDP-45 — 3600 H.P. LOCOMOTIVE

ENGINE NUMBERS
6592-6599

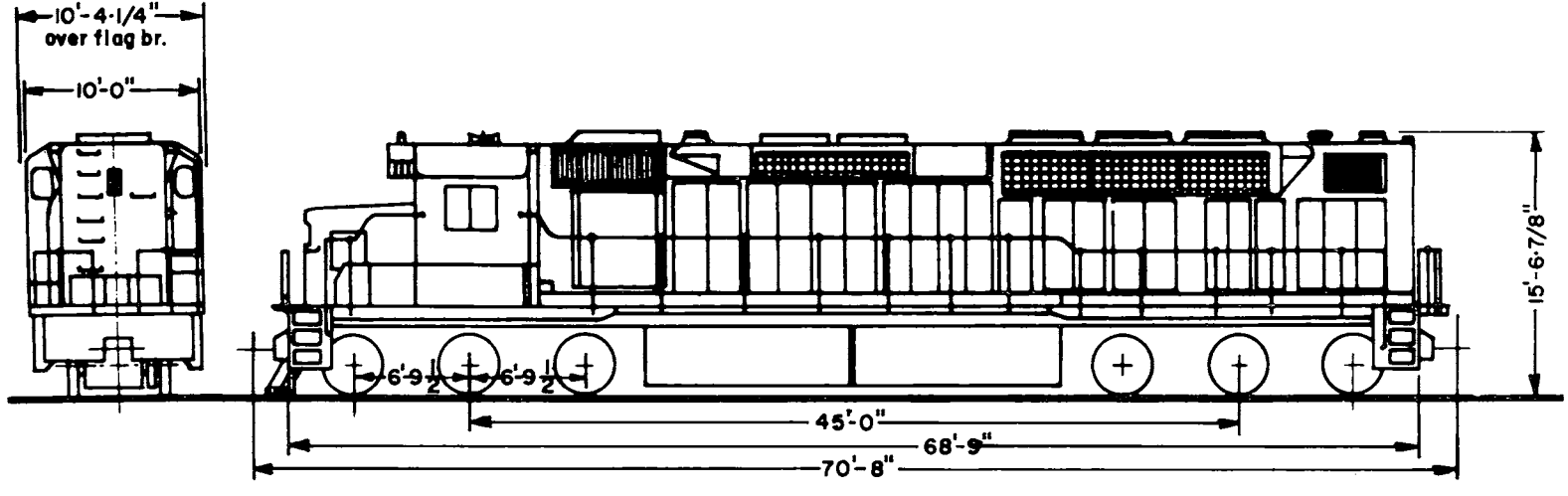

DIESEL ENGINE MODEL . . . 20-645E3	AIR BRAKE CYLS. (4) . . . . . 9"x10"	BATTERY	NOTES:
TRANSITION . . . . . AUTOMATIC	(4) . . . . . 6"x12"	CAPY. . . . . 64V. 420 AMP. HR.	
M.U. CONTROL . . . . . EQUIPPED	JOURNALS . . . HY. RB.. . . . 6½"x12"	COOLING SYSTEM . . . . . 288 GALS.	
SPEED RECORDER . . VAPOR SPD.LG.	GEAR RATIO 17:60	LUBE.OIL CAPY. . . . . 294 GALS.	
SAFETY CONTROL . . . FOOT PEDAL	DRAFT GEAR M-380A	SAND CAPY. . . . . 56 CU. FT.	
	COUPLER . . . .(AL.CONT.). . . . . "F"	SEARCH HARNESS . . . . . EQUIPPED	
CONT. RATED SPEED . . . . . 13.2 MPH			
MAX. SPEED . . . . . 77 MPH		TOILET . . . . . EQUIPPED	

G.E. U-23-C – 2250 H.P. LOCOMOTIVE

B.N. ENG. NUMBER	MAIN GEN.	ALTERNAT.	AUX. GEN.	TRACTION MOTOR	TOTAL WEIGHT	TRACTIVE EFFORT	DYNAMIC BRAKE	AIR BRAKE	AIR COMPRESS.	FUEL CAPY.	EXCITER		
5200-5208	GT-586EIR	NONE	12 KW	752-E6	369,747 LBS.	82,000 LBS.	POTENTIAL	26 L	WBG	3000 GALS.	5GY-50		

G.E. U-23-C – 2250 H.P. LOCOMOTIVE

ENGINE NUMBERS
5200-5208

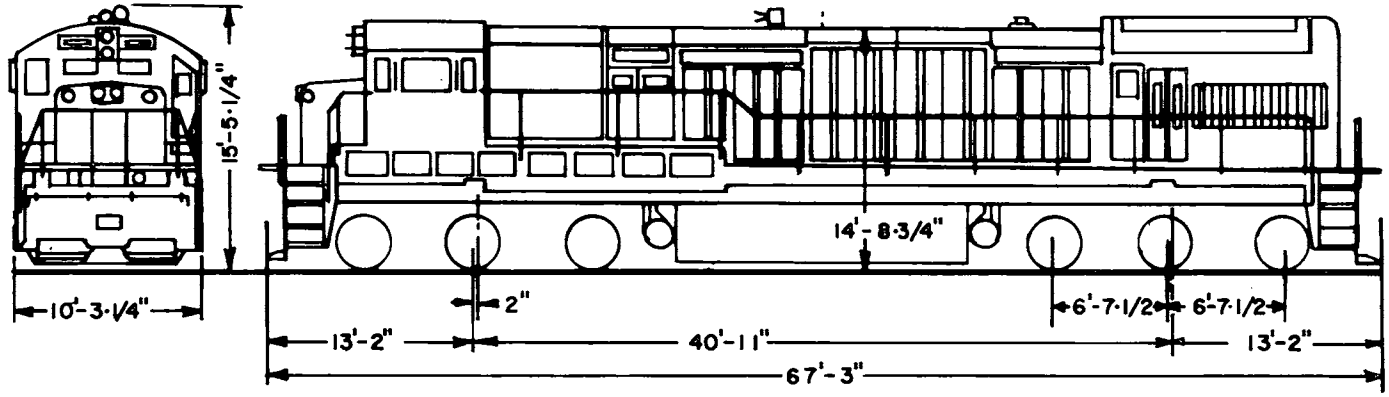

DIESEL ENGINE MODEL 12-FDL	AIR BRAKE CYLS. . . . . 9"x8"	BATTERY	NOTES:
TRANSITION . . . . . AUTOMATIC	JOURNALS. . . .TKN. . . . . 6½"x12"	CAPY. . . . . 64V. 420 AMP. HR.	
M.U. CONTROL . . . . . EQUIPPED	GEAR RATIO 18:74	COOLING SYSTEM . . . . . 350 GALS.	
SPEED RECORDER . . . . . BARCO	DRAFT GEAR M-381	LUB.OIL CAPY. . . . . 300 GALS.	
SAFETY CONTROL . . .FOOT PEDAL	COUPLER . . . (AL.CONT.). . . . . "E"	SAND CAPY. . . . . 60 CU. FT.	
CONT. RATED SPEED . . . . . .7.5 MPH			
MAX. SPEED . . . . . 70 MPH		TOILET . . . . . EQUIPPED	

G.E. U-25-B – 2500 H.P. LOCOMOTIVE

B.N. ENG. NUMBER	MAIN GEN.	ALTERNAT.	AUX. GEN.	TRACTION MOTOR	TOTAL WEIGHT	TRACTIVE EFFORT	DYNAMIC BRAKE	AIR BRAKE	AIR COMPRESS.	FUEL CAPY.	EXCITER		
5400-5423	GT-598	NONE	12 KW	752-E6	269,540 LBS.	50,500 LBS.	POTENTIAL	26 L	3-CWDL	2900 GALS.	GY-50		
5424-5429	GT-598-C4	NONE	12 KW	752-E6	271,280 LBS.	55,000 LBS.	POTENTIAL	26 L	WBG	2900 GALS.	GY-50		

G.E. U-25-B – 2500 H.P. LOCOMOTIVE

ENGINE NUMBERS
5400-5429

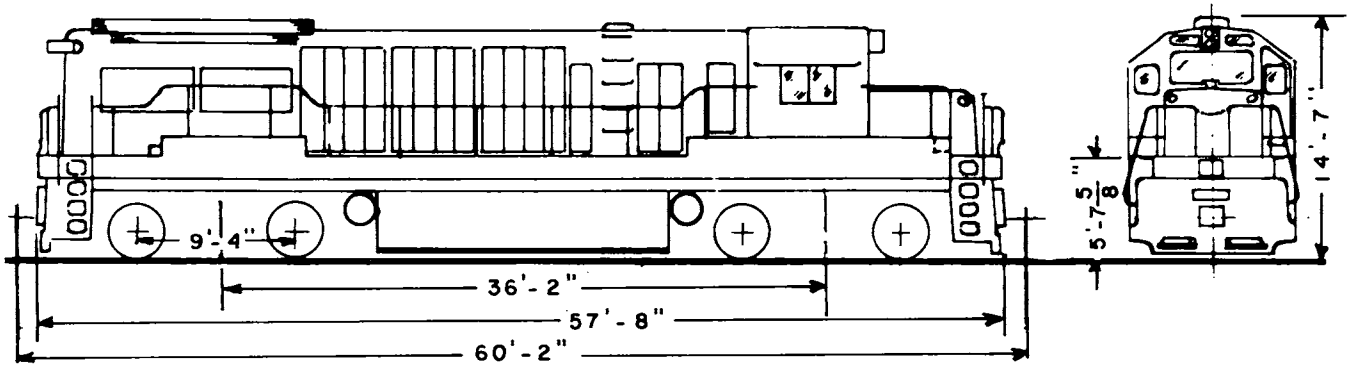

DIESEL ENGINE MODEL . . . 16-7FDL UNITS 5424-5429 . . . . . 16-7FD TRANSITION . . . . . AUTOMATIC M.U. CONTROL . . . . . EQUIPPED SPEED RECORDER . CHI.PNEUMATIC UNITS 5424-5429 . . . . . BARCO SAFETY CONTROL . . . FOOT PEDAL (5400-5423 ONLY) CONT. RATED SPEED (18:65) 15.6 MPH (18:74) 13.7 MPH MAX. SPEED . . . . . (18:65) 77 MPH (18:74) 70 MPH	AIR BRAKE CYLS. . . . . 10"x8" JOURNALS. . . .HY.RB. . . . . 6½"x12" UNITS 5424-5429. . TKN . 6½"x12" GEAR RATIO . . . . . 18:65 UNITS 5424-5429 . . . . . 18:74 DRAFT GEAR . . . . . M-380 UNITS 5424-5429 . . . . . M-381 COUPLER . (AL.CONT.). . . . . "E"	BATTERY CAPY. . 64V. 420 AMP. HR. COOLING SYSTEM . . . . . 290 GALS. LUB.OIL CAPY. . . . . 380 GALS. SAND CAPY. . . . . 32 CU. FT. TOILET . . . . . EQUIPPED	NOTES:

G.E. U-25-C – 2500 H.P. LOCOMOTIVE

B.N. ENG. NUMBER	MAIN GEN.	ALTERNAT.	AUX. GEN.	TRACTION MOTOR	TOTAL WEIGHT	TRACTIVE EFFORT	DYNAMIC BRAKE	AIR BRAKE	AIR COMPRESS.	FUEL CAPY.	EXCITER		
5600-5629	GT-586	NONE	12 KW	752-E6	391,690 LBS.	82,000 LBS.	POTENTIAL	26 L	3CWDL	3500 GALS.	GY-50		
5630-5641	GT-586-B1	NONE	12 KW	752-E6	391,053 LBS.	82,000 LBS.	POTENTIAL	26 L	WBG	3500 GALS.	GY-50		

G.E. U-25-C — 2500 H.P. LOCOMOTIVE

ENGINE NUMBERS
5600-5641

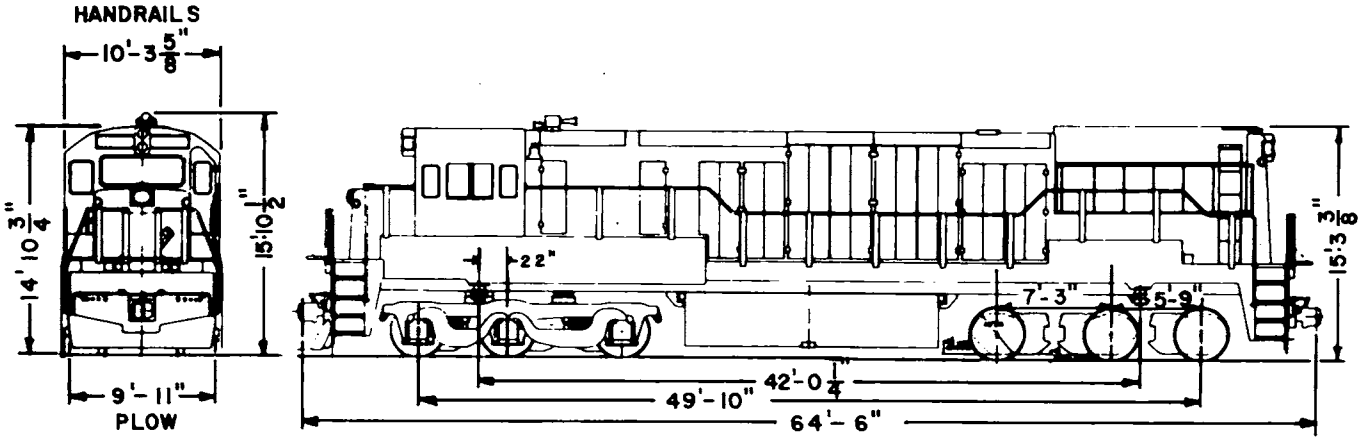

DIESEL ENGINE MODEL . . . 16-7FDL	AIR BRAKE CYLS. . . . . 8"x11"	BATTERY	**NOTES:**
TRANSITION . . . . . AUTOMATIC	JOURNALS. . . .TKN. . . . . 6½"x12"	CAPY. . . . . 64V. 426 AMP. HR.	LOCOTROL MASTER UNITS
M.U. CONTROL . . . . . EQUIPPED	GEAR RATIO 18:74	COOLING SYSTEM . . . . . 290 GALS.	5602,5608,5623,5624
SPEED RECORDER . CHI.PNEUMATIC	DRAFT GEAR M-381	LUB.OIL CAPY. . . . . 380 GALS.	BATTERY TRAINLINE UNITS
SAFETY CONTROL . . . . . NONE	UNITS 5600-5614 . . . . . M-380	SAND CAPY. . . . . 32 CU. FT.	5600-5633
UNITS 5630-5641 . . . . . BARCO	COUPLER . . . .(AL.CONT.). . . . . "E"		**PACESETTER**—LEAD
CONT. RATED SPEED . . . . . .8.2 MPH			5602,5608,5623-5624
UNITS 5618-5620,5630 . . . . .9.2 MPH		TOILET . . . . . EQUIPPED	
MAX. SPEED . . . . . 70 MPH			

G.E. U-28-B – 2800 H.P. LOCOMOTIVE

B.N. ENG. NUMBER	MAIN GEN.	ALTERNAT.	AUX. GEN.	TRACTION MOTOR	TOTAL WEIGHT	TRACTIVE EFFORT	DYNAMIC BRAKE	AIR BRAKE	AIR COMPRESS.	FUEL CAPY.	EXCITER		
5450-5459	GT-598-E1	NONE	12 KW	752-E6	274,700 LBS.	51,000 LBS.	POTENTIAL	26 L	WBG	3250 GALS.	GY-50		
5460-5465	GT-598	NONE	12 KW	752-E6	274,700 LBS.	40,000 LBS.	POTENTIAL	26 L	3-CWDL	3250 GALS.	GY-50		

G.E. U-28-B – 2800 H.P. LOCOMOTIVE

ENGINE NUMBERS
5450-5465

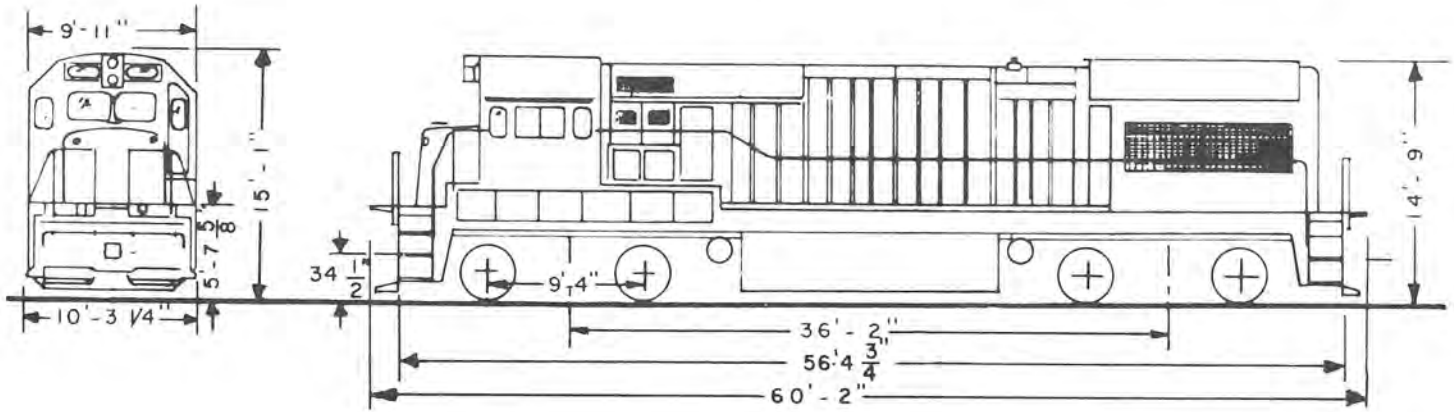

DIESEL ENGINE MODEL . . . 16-7FDL	AIR BRAKE CYLS. . . . . 10"x8"	BATTERY CAPY. . 64V. 420 AMP. HR.	NOTES:
TRANSITION . . . . . AUTOMATIC	JOURNALS . . . . . 6½"x12"	COOLING SYSTEM . . . . . 300 GALS.	
M.U. CONTROL . . . . . EQUIPPED	UNITS 5450-5459 . . . . . TKN GG	LUB. OIL CAPY. . . . . 380 GALS.	
SPEED RECORDER . CHI.PNEUMATIC	UNITS 5460-5465 . . . . . HY.RB.	SAND CAPY. . . . . 48 CU. FT.	
SAFETY CONTROL . . . FOOT PEDAL	GEAR RATIO 23:80		
CONT. RATED SPEED (23:80) 13.5 MPH	UNITS 5460-5465 . . . . . .18:65		
(18:65) 17.5 MPH	DRAFT GEAR M-381		
MAX. SPEED . . . . . (23:80) 79 MPH	COUPLER . (AL.CONT.) . . . . . "E"		
(18:65) 77 MPH		TOILET . . . . . EQUIPPED	

G.E. U-28-C – 2800 H.P. LOCOMOTIVE

B.N. ENG. NUMBER	MAIN GEN.	ALTERNAT.	AUX. GEN.	TRACTION MOTOR	TOTAL WEIGHT	TRACTIVE EFFORT	DYNAMIC BRAKE	AIR BRAKE	AIR COMPRESS.	FUEL CAPY.	EXCITER		
5650-5665	GT-598-C4	NONE	12 KW	752E6	392,173 LBS.	80,500 LBS.	POTENTIAL	26 L	WBG	3500 GALS.	GY-50		
5666-5677	GT-598	NONE	12 KW	752E6	392,173 LBS.	82,000 LBS.	POTENTIAL	26 L	3CWDL	3500 GALS.	GY-50		

G.E. U-28-C – 2800 H.P. LOCOMOTIVE

ENGINE NUMBERS
5650-5677

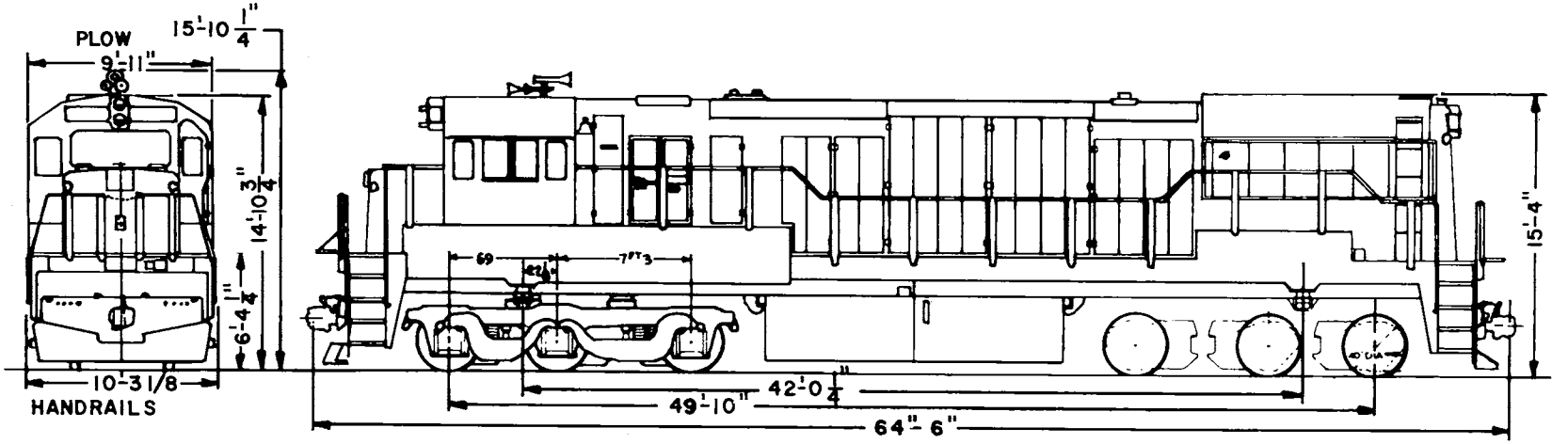

DIESEL ENGINE MODEL . . . 16-7FDL
TRANSITION . . . . . AUTOMATIC
M.U. CONTROL . . . . . EQUIPPED
SPEED CONTROL . . CHI.PNEUMATIC
UNITS 5650-5664 . . . . . BARCO
SAFETY CONTROL . . . . . NONE

CONT. RATED SPEED . . . . . 8.4 MPH
UNITS 5650-5665 . . . . . 9.6 MPH
MAX. SPEED . . . . . 70 MPH

AIR BRAKE CYLS. . . . . 11"x8"
JOURNALS . . . . . 6½"x12"
GEAR RATIO 18:74
DRAFT GEAR M-381
COUPLER . . . .(AL.CONT.) . . . . . "E"

BATTERY
CAPY. . . . . 64V. 420 AMP. HR.
UNITS 5666-5677 . . . 426 AMP. HR.
COOLING SYSTEM . . . . . 290 GALS.
LUB. OIL CAPY. . . . . 380 GALS.
SAND CAPY. . . . . 32 CU. FT.
TM CUTOUT . . . . . EQUIPPED

TOILET . . . . . EQUIPPED

NOTES:

BATTERY TRAINLINE UNITS 5650-5659

G.E. U-30-B – 3000 H.P. LOCOMOTIVE

B.N. ENG. NUMBER	MAIN GEN.	ALTERNAT.	AUX. GEN.	TRACTION MOTOR	TOTAL WEIGHT	TRACTIVE EFFORT	DYNAMIC BRAKE	AIR BRAKE	AIR COMPRESS.	FUEL CAPY.	EXCITER		
5470-5479	5GT-A9	NONE	12 KW	752E6	270,160 LBS.	51,500 LBS.	POTENTIAL	26 L	WBG	3250 LBS.	GY-50		
5480-5484	5GT-A9	NONE	12 KW	752E6	275,260 LBS.	51,500 LBS.	POTENTIAL	26 L	WBG	3250 LBS.	GY-48		